STATE OF DELAWARE
STANDARD CONTROL DRAWINGS

LIST OF DRAWINGS

C-0.00 SYMBOLS & ABBREVIATIONS

C-1.00 VAV AH WITH PREHEAT & CHW COIL, NO RETURN FAN
C-1.01 VAV AH WITH PREHEAT, CHW COIL & RETURN FAN
C-1.02 CV AH WITH PREHEAT, CHW & REHEAT COIL, CO2 VENTILATION & RETURN FAN
C-1.03 100% OA CV AH WITH HUMIDIFIER, PREHEAT & CHW COIL
C-1.04 100% OA VAV AH WITH HUMIDIFIER, PREHEAT & CHW COIL
C-1.05 CV AH WITH PREHEAT COIL, CHW COIL & RETURN FAN
C-1.06 CV AH WITH PREHEAT & CHW COIL, MIN OA DAMPER, NO RETURN FAN
C-1.07 SINGLE DUCT CV AH WITH PREHEAT & CHW COIL

C-2.00 SINGLE DUCT VAV BOX (WITH REHEAT CONTROL)
C-2.01 DUCT MOUNTED HW REHEAT COIL AND HUMIDIFIER
C-2.02 FAN COIL UNIT
C-2.03 FAN COIL UNIT WITH OUTSIDE AIR
C-2.04 WATER SOURCE HEAT PUMP

C-3.00 WATER SOURCE HEAT PUMP SYSTEM
C-3.01 WATER SOURCE HEAT PUMP SYSTEM (CONT'D)
C-3.02 HOT WATER SYSTEM WITH VV PUMPS
C-3.03 CHILLED WATER SYSTEM, AIR COOLED
C-3.04 CHILLED WATER SYSTEM, CONDENSER WATER
C-3.05 CHILLED WATER SYSTEM, CONDENSER WATER (CONT'D)
C-3.06 CHILLED WATER SYSTEM, FLAT PLATE EXCHANGER
C-3.07 CHILLED WATER SYSTEM, FLAT PLATE EXCHANGER (CONT'D)
C-3.08 CHILLED WATER SYSTEM, ICE STORAGE
C-3.09 CHILLED WATER SYSTEM, ICE STORAGE (CONT'D)

C-4.00 ELECTRICAL LADDER DIAGRAMS
C-4.01 MISCELLANEOUS CONTROLS

© 2008 FACILITY DYNAMICS ENGINEERING

REVISIONS

NO.	DESCRIPTION	DATE

Facility Dynamics ENGINEERING
6780 Alexander Bell Drive, Suite 220
Columbia, MD 21046 (410) 290-0800

State of Delaware
Standard Control Drawings

Eng	HJN
Drawn	HJN
Chkd	---
Appd	---
Issued	1/26/2009
Job No.	----
Scale	N/A
Proj Code	

DESIGN REVIEW

TITLE SHEET

00 OF 00
SHEET NUMBER

T-1.00
DWG NUMBER

DDC FUNCTION BLOCK LOGIC SYMBOLS

SYMBOL	DESCRIPTION
POINT NAME AO ADDRESS	OUTPUT POINT – TRANSMITS A VALUE FROM THE FB TO A PHYSICAL OUTPUT CHANNEL ON THE CONTROLLER. DESCRIPTOR – CONTROLLER ADDRESS, POINTNAME AND POINT TYPE AO – ANALOG OUTPUT DO – DIGITAL OUTPUT
ADDRESS AI POINT NAME	INPUT POINT – READS A VALUE FROM A PHYSICAL INPUT ON THE CONTROLLER AND CONVERTS FOR USE INSIDE THE FB. DESCRIPTOR – CONTROLLER ADDRESS, POINTNAME AND POINT TYPE AI – ANALOG INPUT DI – DIGITAL INPUT
POINT–NAME VP	VIRTUAL POINT – ANALOG OR DIGITAL VALUE USED WITHIN A FB OR BROADCAST ACROSS THE LAN.
	DIGITAL WIRE – DIGITAL LOGIC CONNECTION BETWEEN FB'S
	ANALOG WIRE – ANALOG LOGIC CONNECTION BETWEEN FB'S
CONST	CONSTANT – CONSTANT VALUE INPUTS
G	GRAPHIC INTERFACE – VALUE APPEARS ON GRAPHIC SCREEN
A#	ALARM & PRIORITY – TRANSMITS AN ALARM AND ALARM PRIORITY TO APPROPRIATE DEVICES.
M#	MESSAGE AND NUMBER – TRANSMITS A MESSAGE AND MESSAGE NUMBER TO APPROPRIATE DEVICES.
	TREND – ESTABLISHES TREND IN CONTROLLER.
RTM	RUN TIME MONITOR – ACCUMULATES RUNTIME FOR DIGITAL OUTPUT AND CONVERTS TIME TO HOURS.
REF#	REFERENCE FLAG – USED AS CONNECTION TO FB'S BY REFERENCE INSTEAD OF WIRES.
AND	DIGITAL AND GATE– OUTPUT IS ON IF ALL INPUTS ARE TRUE
OR	DIGITAL OR GATE – OUTPUT IS ON IF ANY INPUT IS TRUE.
XOR	DIGITAL EXCLUSIVE OR GATE – OUTPUT IS ON IF ONLY ONE INPUT IS TRUE.
N	INVERSE (NOT)– IF INPUT = ON, OUTPUT = OFF; CONVERSELY IF INPUT =OFF, OUTPUT =ON
I RST LATCHO O	LATCH OFF– OUTPUT IS OFF WHENEVER INPUT IS ON. OUTPUT REMAINS OFF UNTIL RESET CHANGES FROM OFF TO ON.
I RST LATCH1 O	LATCH ON– OUTPUT IS ON WHENEVER INPUT IS ON. OUTPUT REMAINS ON UNTIL RESET CHANGES FROM OFF TO ON.
I ON/OFF # O DELAY	ON/OFF DELAY TIMER– AFTER INPUT IS ON, OUTPUT IS ON/OFF AFTER A PREDETERMINED TIME (#) HAS ELAPSED.
I CYCLE # O DELAY	CYCLE DELAY TIMER – WHEN SET TIME HAS ELAPSED, THE FIRST TIME INPUT IS ON, OUTPUT IS ON AND TIMER RESETS. BEFORE SET TIME HAS ELAPSED, OUTPUT IS OFF WHEN INPUT IS OFF. IF INPUT GOES FROM OFF TO ON BEFORE SET TIME HAS ELAPSED, OUTPUT WILL REMAIN OFF.
PWR	POWER FLAG – ON WHEN CONTROLLER IS INITIALLY POWERED ON AND NO PHASE LOSS IS DETECTED
R T FF Q	FLIP FLOP – CHANGE STATE OF OUTPUT WHEN INPUT CHANGES FROM OFF TO ON: OUTPUT SET TO OFF WHEN RESET (R) GOES CHANGES FROM OFF TO ON
OPTIMUM DB HI I O INC LO	SETPOINT OPTIMIZATION – RESET OF OUTPUT FROM A MAXIMUM VALUE TO A MINIMUM VALUE BASED ON VALUES OR REQUESTS) DB – DEAD BAND INC – INCREMENT/DECREMENT VALUE HI – MAXIMUM RESET VALUE LO – MINIMUM RESET VALUE
SP INTVL MX > +IE+OA I S & B O < –IE–OA MN	SAMPLE & BUMP – CHANGE IN OUTPUT (WITH DEFINED MINIMUM & MAXIMUM VALUES) BY A DEFINED AMOUNT WHEN INPUT DEVIATES FROM SETPOINT (SP) BY A DEFINED AMOUNT AT A DEFINED INTERVAL. I – INPUT O – OUTPUT MX – MAXIMUM OUTPUT MN – MINIMUM OUTPUT INTVL – INTERVAL > +IE, +OA – WHEN INPUT RISES ABOVE SETPOINT BY AMOUNT '+IE', OUTPUT IS INCREASED BY AMOUNT '+OA' < –IE, –OA – WHEN INPUT FALLS BELOW SETPOINT BY AMOUNT '–IE', OUTPUT IS REDUCED BY AMOUNT '–OA'

SYMBOL	DESCRIPTION
SP I P I D DA O	PID CONTROLLER – PROPORTIONAL, INTEGRAL, DERIVATIVE LOOPS USE STANDARD ALGORITHMS TO CALCULATE AN OUTPUT BASED ON A VARIABLE INPUT. PROPORTIONAL IS BASED ON THE DIFFERENCE BETWEEN THE INPUT AND THE SETPOINT. INTEGRAL IS BASED ON THE THE TIME THE INPUT DEVIATES FROM THE SETPOINT. DERIVATIVE IS BASED ON THE THE RATE THE INPUT IS APPROACHING THE SETPOINT. THE PID CAN BE EITHER DIRECT ACTING (DA) OR REVERSE ACTING (RA). IN A DA PID WHEN THE INPUT INCREASES THE OUTPUT INCREASES. IN A RA PID WHEN THE INPUT INCREASES THE OUTPUT DECREASES.
SP I F L T DA INC DEC	FLOATING CONTROLLER – OUTPUT WILL INCREASE OR DECREASE INCREMENTALLY AS INPUT DEVIATES FROM SETPOINT. IN A DA CONTROLLER WHEN THE INPUT INCREASES THE OUTPUT INCREASES. IN A RA CONTROLLER WHEN THE INPUT INCREASES THE OUTPUT DECREASES.
RESET 100 I 0 180 O 100	RESET CONTROLLER – USER DEFINED OUTPUT VALUE WILL RESET IN A LINEAR RELATIONSHIP BASED ON USER DEFINED INPUT VALUE.
OFF SR ON P	SWITCHING RELAY – SWITCHES OUTPUT BETWEEN TWO INPUTS WHEN DIGITAL PILOT INPUT IS ON. SWITCH SHOWN IN NORMAL POSITION
OFF DSR ON > SP2 < SP1	DEADBAND SWITCHING RELAY – DIGITAL OUTPUT CHANGES WHEN INPUT VALUE RISES/FALLS ABOVE/BELOW SETPOINT 1 (SP1). DIGITAL OUTPUT RESTORES TO NORMAL WHEN INPUT RISES/FALLS ABOVE/BELOW SETPOINT 2 (SP2). SWITCH SHOWN IN NORMAL POSITION
I IF > SP O	LOGICAL IF EXPRESSION – THE OUTPUT IS ON IF THE INPUT MEETS THE CONDITION OF THE SETPOINT.
RAMP CHNG % I # Sec Max O Min	RAMP CONTROLLER – LIMITS THE RATE OF CHANGE OF AN OUTPUT ON AN INCREASE IN VALUE OR A DECREASE IN VALUE. CHNG% – % OF TOTAL MAXIMUM OUTPUT VALUE ALLOWED FOR OUTPUT CHANGE # = TIME IN SECONDS MAX = MAXIMUM OUTPUT VALUE MIN = MINIMUM OUTPUT VALUE
TMR I O OVRT	TIMER – OUTPUT IS ON FOR A USER SPECIFIED TIME AFTER INPUT CHANGES FROM OFF TO ON
ATS I O OVRT Row	AUTOMATIC TIME SCHEDULER – INCLUDES SCHEDULES ENTERED INTO CONTROLLER FOR 7 DAY SCHEDULING WITH HOLIDAYS AND OVERRIDE SCHEDULES. INCLUDES OVERRIDE INPUT FOR UNSCHEDULED OVERRIDE. OUTPUTS REFERENCE FLAGS CAN INCLUDE : HEATING SETBACK, COOLING SETBACK, AND UNOCCUPIED
OS/S I O OVRT Row	OPTIMUM START/STOP TIME SCHEDULER – INCLUDES SCHEDULES ENTERED INTO CONTROLLER FOR 7 DAY SCHEDULING WITH HOLIDAYS AND OVERRIDE SCHEDULES. INCLUDES OPTIMUM START STOP ROUTINE. OUTPUTS REFERENCE FLAGS CAN INCLUDE : WARM–UP, COOL–DOWN, HEATING SETBACK, COOLING SETBACK, AND UNOCCUPIED. INCLUDES OVERRIDE INPUT (OVR) FOR UNSCHEDULED OVERRIDE
I CALC # + # = O	CALCULATION BLOCK – OUTPUT IS EQUAL TO CALCULATION USING INPUT(S). EQUATION CAN BE MATHEMATICAL OR A PREDEFINED INDUSTRY STANDARD ALGORITHM (ie. CFM, VELOCITY PRESSURE, ENTHALPY, DEW POINT ETC.)
H I	HIGH SELECTOR – SELECTS HIGHER OF INPUT VALUES
L O	LOW SELECTOR – SELECTS LOWER OF INPUT VALUES
A V E	AVERAGING BLOCK – MATHEMATICALLY AVERAGES INPUT VALUES.
DLY MTR COM P R O O F RST ALM NML	PROOFING MODULE – GENERATES VALUES BASED ON A COMPARISON OF COMMAND AND MONITORING INPUTS. DLY – PROOFING DELAY PERIOD MTR – MONITOR (INPUT FOR PROOF) COM – COMMAND (INPUT FOR PROOF) RST – RESET (IF LATCHING IS USED) ALM – (ON WHEN MONITOR INPUT IS NOT EQUAL TO COMMAND INPUT) NML – OUTPUT IS ON WHEN MONITOR AND COMMAND INPUTS ARE ON AND NORMAL CONDITIONS ARE MET
	TIME AVERAGE BLOCK – OUTPUT IS EQUAL TO SUM OF INPUTS FROM USER SPECIFIED PREVIOUS TIME PERIOD (OR NUMBER OF SCANS) TO CURRENT TIME (OR SCAN) DIVIDED BY NUMBER OF DISCRETE POINTS IN THE SUMMATION PERIOD. OUTPUT IS A ROLLING TIME BASED AVERAGE OF THE INPUT VALUE.
REQUEST ALCK BLCK CLCK DLCK STAGER ROTATE A B C D	STAGER BLOCK – OUTPUT IS EQUAL TO SUM OF REQUESTS FROM USER SPECIFIED INPUTS. ROTATION SHALL BE DETERMINED BY USER DEFINED PARAMETERS. EACH INDIVIDUAL OUTPUT CAN BE LOCKED OUT BY USER DEFINED INDIVIDUAL INPUTS. LOCKED OUT OUTPUTS SHALL BE SKIPPED IN ROTATION. (SEE SEQUENCE OF OPERATION FOR DETAILS)
PWR SWAP FAILA FAILB ACK OUTA OUTB LEAD/STANDBY	LEAD/STANDBY BLOCK – ON RUN COMMAND, LEAD OUTPUT IS SELECTED. LEAD OUTPUT CAN BE SWAPPED MANUALLY OR BY A TIME SCHEDULE. WHEN THE LEAD EQUIPMENT FAILS, THE STANDBY OUTPUT IS SELECTED. (SEE SEQUENCE OF OPERATION FOR DETAILS)

LEGEND

TUBING DESIGNATIONS	
	NEW TUBING
	EXISTING TUBING
WIRING DESIGNATIONS	
	NEW WIRING
	EXISTING WIRING

CONTROL SYMBOLS

SYMBOL	DESCRIPTION	SYMBOL	DESCRIPTION
AI POINT NAME POINT NAME AO	DDC POINT DESCRIPTOR WITH NAME AI – ANALOG INPUT DI – DIGITAL INPUT AO – ANALOG OUTPUT DO – DIGITAL OUTPUT		DISCONNECT SWITCH
TS1	TEMPERATURE SENSOR WITH AVERAGING ELEMENT	480V 120V	CONTROL TRANSFORMER
TS1	TEMPERATURE SENSOR WITH SINGLE POINT ELEMENT	MS EP1 S	RELAY COILS
TS1	TEMPERATURE SENSOR WITH PIPE WELL		FUSE
TS1	SPACE TEMPERATURE SENSOR	OL	THERMAL OVERLOAD
HS1	HUMIDITY SENSOR		NORMALLY OPEN AND NORMALLY CLOSED CONTACTS
	CURRENT SENSOR	HAND AUTO OFF	HAND–OFF–AUTO SELECTOR SWITCH
SD1	SMOKE DETECTOR		WIRING DESIGNATION. (NO. OF HATCHES INDICATES NO. OF CONDUCTORS)
DPS2	DIFFERENTIAL PRESSURE SWITCH		WIRING CONNECTION
FS1	WATER FLOW SWITCH	ON–OFF	ON–OFF SELECTOR SWITCH
V1 N.C.	TWO WAY CONTROL VALVE	V2 C. N.C. N.O.	THREE WAY CONTROL VALVE
D1	DAMPER ACTUATOR	LS1	LIMIT SWITCH
DPT1 0–5" w.c.	AIR DIFFERENTIAL PRESSURE TRANSMITTER (0 – 5" RANGE)	D–1	CONTROL DAMPER
VSD	VARIABLE SPEED DRIVE	DP	HYDRONIC DIFFERENTIAL PRESSURE TRANSMITTER
FZ	FREEZESTAT	FM1	HYDRONIC FLOWMETER
AFMS1	AIRFLOW MEASURING STATION	TS1	THERMOSTAT

LOGIC VARIABLES

BINARY	ANALOG	DESCRIPTION
BIVF		ON WHEN BUILDING CHW ISOLATION VALVE PROOF FAILS
BURN		ON WHEN ICE BURN MODE IS ACTIVE
CDN		ON WHEN COOL–DOWN MODE ACTIVE
CHWF		ON WHEN CHWS TEMPERATURE IS ABOVE CALCULATED SETPOINT
DIVF		ON WHEN DOMESTIC WATER ISOLATION VALVE PROOF FAILS
DIVN		ON WHEN DOMESTIC WATER ISOLATION VALVE NORMAL POSITOIN PROVEN
DrIVF		ON WHEN DRAIN WATER ISOLATION VALVE PROOF FAILS
DWIV		ON WHEN DOMESTIC WATER ISOLATION VALVE IS COMMANDED OPEN
EMRG		ON WHEN WSHP EMERGENCY MODE IS ACTIVE
Fire		ON WHEN FIRE ALARM IS ACTIVE
FLOW		ON WHEN EITHER PUMP IS PROVEN
FRZ		ON WHEN FREEZESTAT IS IN ALARM
HTG		ON WHEN SPACE TEMPERATURE LOWER THAN NORMAL SPACE SETPOINT
HxIV		ON WHEN HEAT EXCHANGER ISOLATION VALVE IS COMMANDED OPEN
HxIVF		ON WHEN HEAT EXCHANGER ISOLATION VALVE PROOF FAILS
HxIVN		ON WHEN HEAT EXCHANGER ISOLATION VALVE NORMAL POSITOIN PROVEN
ICE		ON WHEN ICE MAKE MODE IS ACTIVE
MAGO		ON WHEN OA CONDITIONS ALLOW ECONOMIZER CONTROL
MODE		ON WHEN UNIT COMMANDED TO LOW SPEED; OFF FOR HIGH SPEED
Occ		ON WHEN OCCUPIED MODE ACTIVE
OcPIR		ON WHEN PASSIVE IR DETECTOR IS ACTIVE DURING OCCUPANCY
Px		ON WHEN PUMP x IS COMMANDED TO RUN
PxFL		ON WHEN PUMP x PROOF HAS FAILED
PxPF		ON WHEN PUMP x STATUS IS PROVEN
RUN		ON WHEN UNIT COMMANDED TO START
SBC		ON WHEN SETBACK COOLING MODE ACTIVE
SBH		ON WHEN SETBACK HEATING MODE ACTIVE
SFTY		ON WHEN "FRZ", "Fire" OR "SMK" ARE ON
SGO		ON WHEN SUPPLY FAN ENERGIZED AND STATUS PROVEN
SMK		ON WHEN EITHER SMOKE DETECTOR IS IN ALARM
Sysgo		ON WHEN HEATING SYSTEM IS ENABLED
WUP		ON WHEN WARM–UP MODE ACTIVE
	CPCT	VARIABLE CALCULATED VALUE OF CHW VALVE POSITION
	DASP	VARIABLE CALCULATED VALUE OF DISCHARGE TEMPERATURE SETPOINT
	EPCT	VARIABLE CALCULATED VALUE OF ECONOMIZER PID OUTPUT
	HPCT	VARIABLE CALCULATED VALUE OF HW VALVE POSITION
	HWS	VARIABLE VALUE OF HOT WATER SUPPLY TEMPERATURE
	HWSP	VARIABLE CALCULATED VALUE OF HOT WATER SUPPLY TEMPERATURE SETPOINT
	MAT	VARIABLE VALUE OF MIXED AIR TEMPERATURE
	MINOA	VARIABLE VALUE OF MIN OA DAMPER POSITION
	NmlSP	VARIABLE CALCULATED VALUE OF NORMAL SPACE TEMPERATURE SETPOINT
	OAT	VARIABLE VALUE OF OUTSIDE AIR TEMPERATURE
	PHT	VARIABLE VALUE OF PREHEAT AIR TEMPERATURE
	PxRT	VARIABLE VALUE OF PUMP x RUNTIME (HH:MM)
	SAT	VARIABLE VALUE OF SUPPLY AIR TEMPERATURE
	SCFM	VARIABLE VALUE OF SUPPLY AIR FLOW (CFM)
	SpTmp	VARIABLE VALUE OF SPACE TEMPERATURE

ABBREVIATIONS

ALM	ALARM	NC	NORMALLY CLOSED
AH	AIR HANDLER	NO	NORMALLY OPEN
BLDG	BUILDING	OA	OUTSIDE AIR
C	COMMON	OVRD	OVERRIDE
CL	COOL	RA	RETURN AIR
CHPS	CHILLED WATER PUMP, SECONDARY	REQ	REQUEST
CHWP	CHILLED WATER PUMP	RF	RETURN FAN
CHWR	CHILLED WATER RETURN	RLF	RELIEF FAN
CHWS	CHILLED WATER SUPPLY	S/S	START / STOP
CW	CONDENSER WATER	SA	SUPPLY AIR
CWP	CONDENSER WATER PUMP	SD	SMOKE DETECTOR
CWR	CONDENSER WATER RETURN	SEC	SECONDARY OR SECONDS
CWS	CONDENSER WATER SUPPLY	SF	SUPPLY FAN
DD	DOWN–DUCT	SCHWR	SECONDARY CHILLED WATER RETURN
DP	DIFFERENTIAL PRESSURE	SCHWS	SECONDARY CHILLED WATER SUPPLY
EF	EXHAUST FAN	SHWR	SECONDARY HOT WATER RETURN
FBK	FEEDBACK	SHWS	SECONDARY HOT WATER SUPPLY
FC	FAN COIL	T	TEMPERATURE
HOA	HAND – OFF – AUTOMATIC	TB	TERMINAL BOX
HT	HEAT	TW	TEMPERED WATER
HWP	HOT WATER PUMP	TWP	TEMPERED WATER PUMP
HWPS	HOT WATER PUMP, SECONDARY	TWR	TEMPERED WATER RETURN
HWR	HOT WATER RETURN	TWS	TEMPERED WATER SUPPLY
HWS	HOT WATER SUPPLY	VP	VELOCITY PRESSURE
ISO	ISOLATION	VSD	VARIABLE SPEED DRIVE
MA	MIXED AIR		

© 2008 FACILITY DYNAMICS ENGINEERING

REVISIONS

NO.	DESCRIPTION	DATE

Facility Dynamics ENGINEERING
6180 Alexander Bell Drive Suite 200
Columbia, MD 21046 (410) 290–0800

State of Delaware

Standard Control Drawings

Eng	HJN
Drawn	HJN
Chkd	---
Appd	---
Issued	1/26/2009
Job No.	----
Scale	N/A
Proj Code	

DESIGN DOCUMENT

SYMBOLS & ABBREVIATIONS

00 OF 00
SHEET NUMBER

C–0.00

DWG NUMBER

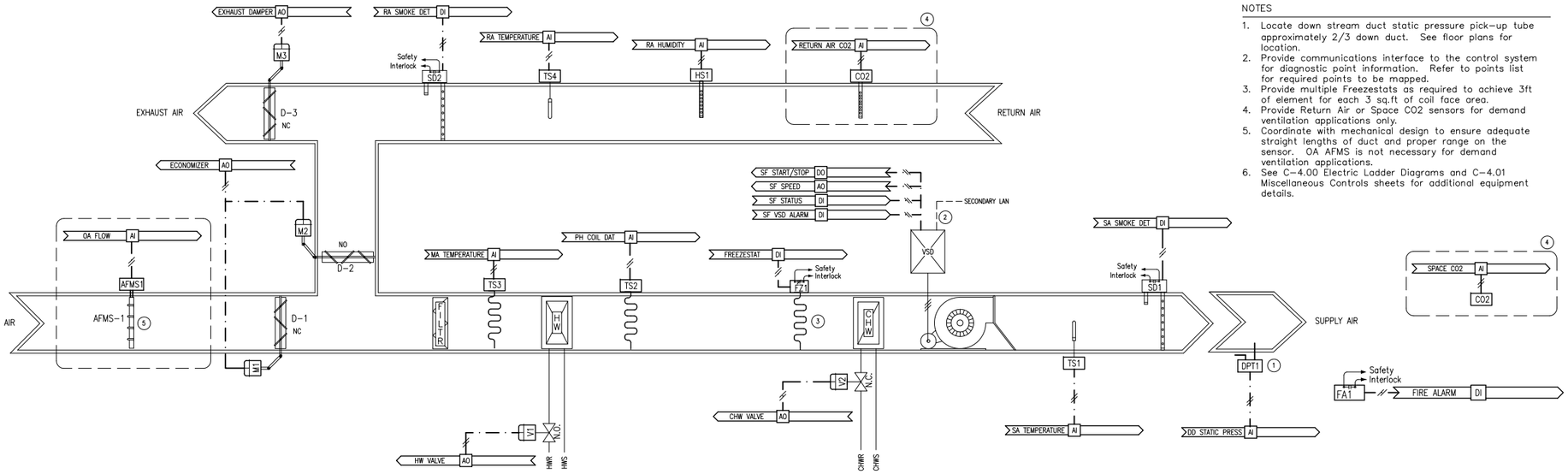

NOTES

1. Locate down stream duct static pressure pick-up tube approximately 2/3 down duct. See floor plans for location.
2. Provide communications interface to the control system for diagnostic point information. Refer to points list for required points to be mapped.
3. Provide multiple Freezestats as required to achieve 3ft of element for each 3 sq.ft of coil face area.
4. Provide Return Air or Space CO2 sensors for demand ventilation applications only.
5. Coordinate with mechanical design to ensure adequate straight lengths of duct and proper range on the sensor. OA AFMS is not necessary for demand ventilation applications.
6. See C-4.00 Electric Ladder Diagrams and C-4.01 Miscellaneous Controls sheets for additional equipment details.

POINTS LIST

POINT DESCRIPTOR	POINT TYPE DI	AI	DO	AO	COMMENTS
SUPPLY FAN START/STOP			•		
SUPPLY FAN STATUS	•				PROOF ALARM
SUPPLY FAN VSD ALARM	•				
SUPPLY FAN SPEED				•	
DOWN DUCT STATIC PRESSURE		•			
SUPPLY TEMPERATURE		•			
SUPPLY SMOKE DETECTOR	•				
RETURN SMOKE DETECTOR	•				
PREHEAT COIL DISCHARGE TEMP		•			
FREEZESTAT	•				
MIXED AIR TEMPERATURE		•			CRITCAL ALARM < 40°F;
RETURN AIR TEMPERATURE		•			
RETURN AIR CO2 SENSOR		•			
RETURN AIR HUMIDITY		•			
ZONE CO2 SENSOR		•			
OUTSIDE AIR FLOW (CFM)		•			
CHILLED WATER VALVE				•	
HOT WATER VALVE				•	
ECONOMIZER				•	
EXHAUST DAMPER				•	
FIRE ALARM	•				
SUPPLY FAN VFD FAULT	•				NETWORK INTERFACE POINT
SUPPLY FAN VFD FEEDBACK		•			NETWORK INTERFACE POINT
SUPPLY FAN VFD KW		•			NETWORK INTERFACE POINT
SUPPLY FAN BYPASS	•				NETWORK INTERFACE POINT

SEQUENCE OF OPERATION

General: The VAV air handler shall be fully controlled by the BAS serving multiple terminal units with reheat capability. Air handler control logic strategies shall include
1. scheduled occupancy with optimum preoccupancy
2. dry bulb comparison economizer control
3. sequenced heating and cooling coil valve control
4. fixed damper controlled, minimum outside air control
5. mixed air low limit
6. high pressure safety
7. freeze safety.
8. smoke safety

Supply Fan: BAS shall control the starting and stopping of the supply fan as follows:
1. Start/Stop: BAS shall command the operation of the supply fan and it shall run continuously whenever the AH is "energized" as specified for the applicable logic strategies specified in item Air Handlers General above.
2. Proof: BAS shall prove fan operation and use the status indication to accumulate runtime.
3. VSD Control: Whenever the fan is energized, BAS shall control the speed of the VSD to maintain the supply duct static pressure setpoint. On start and stop, the VSD shall ramp to speed and slow down within adjustable acceleration and deceleration limits. BAS shall monitor a common alarm output from the drive and enunciate a level 2 alarm when an alarm is indicated.
4. Supply Duct Pressure Setpoint: Setpoint shall be a fixed value manually adjustable through the operator interface.

Return/Exhaust/OA Dampers: BAS shall control the dampers as follows:
1. Closed: When AH is deenergized, dampers shall remain in their "off" positions. When AH is energized during unoccupied period the minimum OA flow setpoint will be 0 cfm which will close the OA damper unless economizer is available.
2. Minimum OA Control: BAS shall maintain the minimum scheduled OA flow using the damper controlled fixed strategy method. Demand Ventilation applications will reset the OA open as needed to maintain a maxmimum CO2 setpoint.
3. Demand Ventilation: Applications using CO2 sensor(s) (Return Duct and/or Space) to maintain a maximum CO2 setpoint shall operate as follows: Whenever the fan status is proven and the unit is indexed to occupied mode, the minimum OA (setpoint/position) shall be reset from the TAB calculated minimum (setpoint/position) to full open as the CO2 sensor reading rises from 350ppm (adj.) to 800ppm (adj.).
4. Economizer: BAS shall modulate dampers per the dry bulb comparison economizer detailed in 'Air Handlers General' section 15958. Mixed air temperature setpoint shall be 3°F below the design discharge air temperature setpoint.

Space Temperature Control: The space temperatures shall be controlled via individual VAV boxes. The setback setpoint for cycling the unit shall be 65°F (adj.) for heating and 80°F (adj.) for cooling. Ensure that these setpoints are outside the control range of all box control loops.

Discharge Temperature Control: The discharge temperature setpoint shall be controlled as follows
1. Setpoint shall be reset from 55°F to 65°F both adjustable to maintain the cooling requests at 4 (adj.) Multiple requests may be broadcast from more critical VAV boxes.
2. When the unit is energized for setback heating during the unoccupied period, the discharge temperature setpoint shall be 75°F (adj.)
3. When the unit is energized for morning cool-down or setback cooling, the discharge setpoint shall be the warmest zone temperature, minus 15°F.
4. Whenever the unit is energized for the occupied period and the occupancy sensor indicates vacancy for 15 minutes (adj.) discharge temperature cooling setpoint shall be 70°F (adj.) and heating setpoint shall be 60°F (adj.) until the occupancy sensor detects occupancy again.

Preheating Section:
1. HW Heating Valve: Whenever AH is energized, N.O. valve shall modulate per the higher of 1) a PID loop to maintain a leaving temperature of the discharge air temperature setpoint minus 5°F and 2) a proportional only loop maintaining a low limit of 45°F preheat coil discharge air temperature.

Cooling Section:
1. Cooling Coil Valve: N.C. cooling coil valve shall modulate via a DA PID loop to maintain discharge temperature setpoint. During dehumidification cooling coil shall be commanded 100% open. During unoccupied period, if AH is energized for heating, or warm-up, the cooling coil valve shall remain closed.

© 2008 FACILITY DYNAMICS ENGINEERING

VAV AH WITH PREHEAT & CHW COIL, NO RETURN FAN

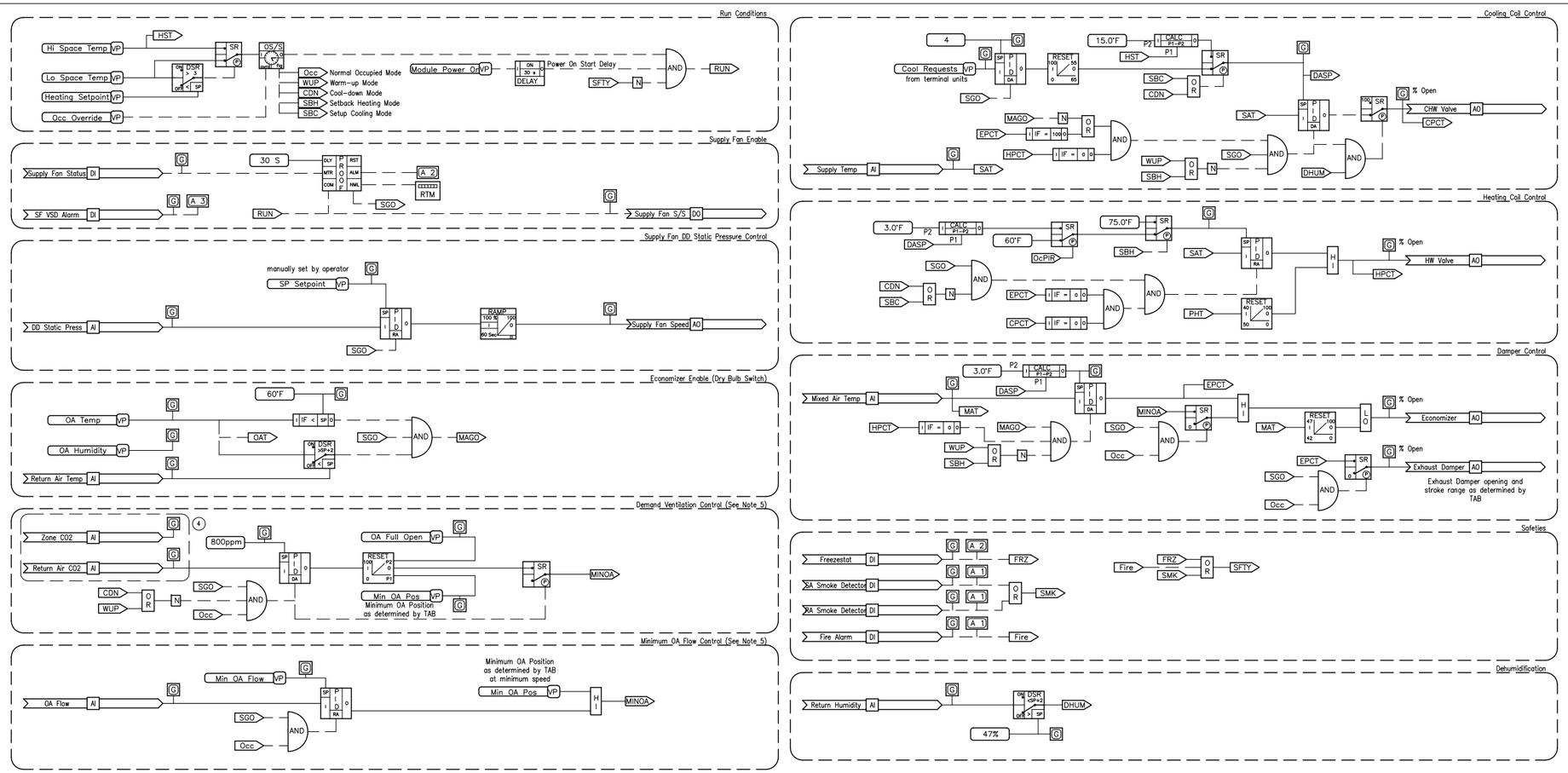

Software Logic Diagram

REVISIONS

NO.	DESCRIPTION	DATE

Facility Dynamics ENGINEERING
6180 Alexander Bell Drive Suite 220
Columbia, MD 21046 (410) 290-0800

State of Delaware

Standard Control Drawings

Eng	HJN
Drawn	HJN
Chkd	---
Appd	---
Issued	11/10/2008
Job No.	----
Scale	N/A
Proj Code	

DESIGN DOCUMENT

VAV AH WITH PREHEAT & CHW COIL, NO RETURN FAN

00 OF 00
SHEET NUMBER

C-1.00
DWG NUMBER

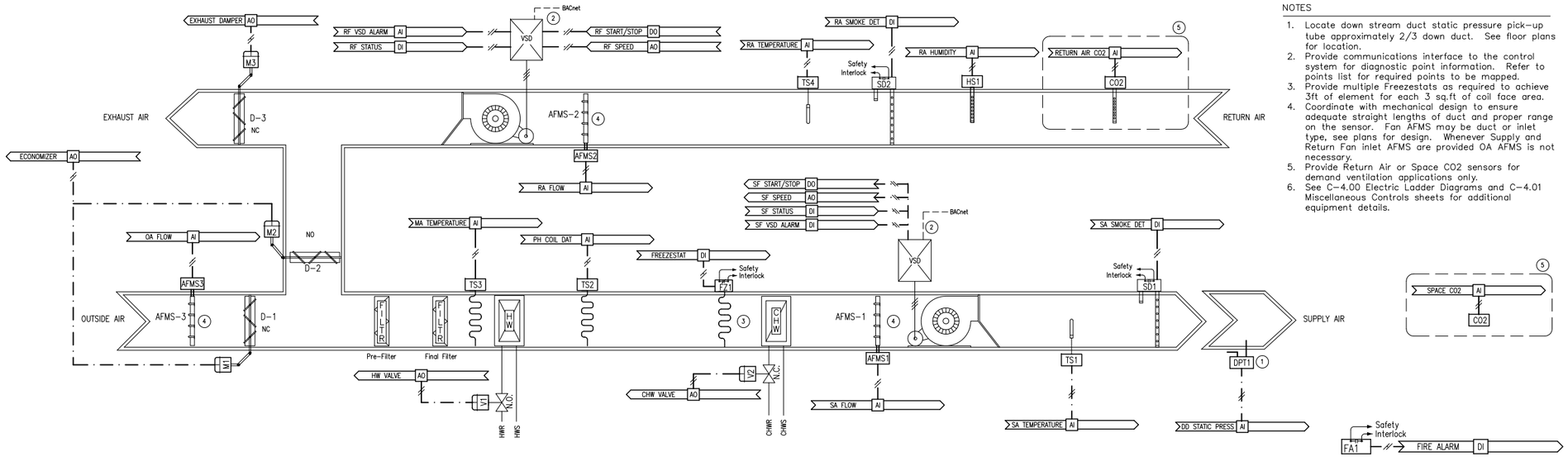

NOTES

1. Locate down stream duct static pressure pick-up tube approximately 2/3 down duct. See floor plans for location.
2. Provide communications interface to the control system for diagnostic point information. Refer to points list for required points to be mapped.
3. Provide multiple Freezestats as required to achieve 3ft of element for each 3 sq.ft of coil face area.
4. Coordinate with mechanical design to ensure adequate straight lengths of duct and proper range on the sensor. Fan AFMS may be duct or inlet type, see plans for design. Whenever Supply and Return Fan inlet AFMS are provided OA AFMS is not necessary.
5. Provide Return Air or Space CO2 sensors for demand ventilation applications only.
6. See C-4.00 Electric Ladder Diagrams and C-4.01 Miscellaneous Controls sheets for additional equipment details.

POINTS LIST

POINT DESCRIPTOR	DI	AI	DO	AO	COMMENTS
X FAN START/STOP			•		TYPICAL FOR TWO FANS
X FAN STATUS	•				PROOF ALARM; TYPICAL FOR TWO FANS
X FAN VSD ALARM	•				TYPICAL FOR TWO FANS
X FAN SPEED				•	TYPICAL FOR TWO FANS
DOWN DUCT STATIC PRESSURE		•			
SUPPLY TEMPERATURE		•			
SUPPLY SMOKE DETECTOR	•				
RETURN SMOKE DETECTOR	•				
PREHEAT COIL DISCHARGE TEMP		•			
FREEZESTAT	•				
MIXED AIR TEMPERATURE		•			CRITCAL ALARM < 40°F;
RETURN AIR TEMPERATURE		•			
RETURN AIR HUMIDITY		•			
RETURN AIR CO2 SENSOR		•			
ZONE CO2 SENSOR		•			
OUTSIDE AIR FLOW (CFM)		•			
SUPPLY AIR FLOW (CFM)		•			
RETURN AIR FLOW (CFM)		•			
CHILLED WATER VALVE				•	
HOT WATER VALVE				•	
ECONOMIZER				•	
EXHAUST DAMPER				•	
FIRE ALARM	•				
X FAN VFD FAULT	•				NETWORK INTERFACE POINT; TYPICAL FOR (2)
X FAN VFD FEEDBACK		•			NETWORK INTERFACE POINT; TYPICAL FOR (2)
X FAN VFD KW		•			NETWORK INTERFACE POINT; TYPICAL FOR (2)
X FAN BYPASS	•				NETWORK INTERFACE POINT; TYPICAL FOR (2)

REVISIONS

NO.	DESCRIPTION	DATE

Facility Dynamics ENGINEERING
6180 Alexander Bell Drive Suite 220
Columbia, MD 21046 (410) 290-0800

SEQUENCE OF OPERATION

General: The VAV air handler shall be fully controlled by the BAS serving multiple terminal units with reheat capability. Air handler control logic strategies shall include
1. scheduled occupancy with optimum preoccupancy
2. dry bulb comparison economizer control
3. sequenced heating and cooling coil valve control
4. fixed damper controlled, minimum outside air control
5. mixed air low limit
6. high pressure safety
7. freeze safety.
8. smoke safety

Supply Fan: BAS shall control the starting and stopping of the supply fan as follows:
1. Start/Stop: BAS shall command the operation of the supply fan and it shall run continuously whenever the AH is "energized" as specified for the applicable logic strategies specified in item Air Handlers General above.
2. Proof: BAS shall prove fan operation and use the status indication to accumulate runtime.
3. VSD Control: Whenever the fan is energized, BAS shall control the speed of the VSD to maintain the supply duct static pressure setpoint. On start and stop, the VSD shall ramp to speed and slow down within adjustable acceleration and deceleration limits. BAS shall monitor a common alarm output from the drive and enunciate a level 2 alarm when an alarm is indicated.
4. Supply Duct Pressure Setpoint: Setpoint shall be:
   a) Reset between the limits of .5" to 2" as to maintain cooling requests of the VAV boxes at 4 with all values adjustable.

Return Fan: BAS shall control the starting and stopping of the return fan as follows.
1. Start/Stop: BAS shall command the operation of the return fan and it shall run continuously whenever the AH is "energized" as specified for the applicable logic strategies specified in item Air Handlers General above.
2. Proof: BAS shall prove fan operation and use the status indication to accumulate runtime.
3. Capacity Control: BAS shall control the output of the return fan per the following logic strategy:
   a) Rescaled Output Capacity Control

Return/Exhaust/OA Dampers: BAS shall control the dampers as follows:
1. Closed: When AH is deenergized, dampers shall remain in their "off" positions. When AH is energized during unoccupied period the minimum OA flow setpoint will be 0 cfm which will close the OA damper unless economizer is available.
2. Minimum OA Control: BAS shall maintain the minimum scheduled OA using the damper controlled fixed strategy. Demand Ventilation applications will reset the OA open as needed to maintain a maxmimum CO2 setpoint.
3. Demand Ventilation: Applications using CO2 sensor(s) (Return Duct and/or Space) to maintain a maximum CO2 setpoint shall operate as follows: Whenever the fan status is proven and the unit is indexed to occupied mode, the minimum OA setpoint shall be reset from the TAB calculated minimum setpoint to full open as the CO2 sensor reading rises from 350ppm (adj.) to 800ppm (adj.).
4. Economizer: BAS shall modulate dampers per the dry bulb comparison economizer detailed in 'Air Handlers General' section 15958. Mixed air temperature setpoint shall be 3°F below the design discharge air temperature setpoint.

Space Temperature Control: The space temperatures shall be controlled via individual VAV boxes. The setback setpoint for cycling the unit shall be 65°F (adj.) for heating and 80°F (adj.) for cooling. Ensure that these setpoints are outside the control range of all box control loops.

Discharge Temperature Control: The discharge temperature setpoint shall be controlled as follows
1. Setpoint shall be reset from 55°F to 65°F both adjustable to maintain the cooling requests at 4 (adj.) Multiple requests may be broadcast from more critical VAV boxes.
2. When the unit is energized for setback heating during the unoccupied period, the discharge temperature setpoint shall be 75°F (adj.)
3. When the unit is energized for morning cool-down or setback cooling, the discharge setpoint shall be the warmest zone temperature, minus 15°F.
4. Whenever the unit is energized for the occupied period and the occupancy sensor indicates vacancy for 15 minutes (adj.) discharge temperature cooling setpoint shall be 70°F (adj.) and heating setpoint shall be 60°F (adj.) until the occupancy sensor detects occupancy again.

Preheating Section:
1. HW Heating Valve: Whenever AH is energized, N.O. valve shall modulate per the higher of 1) a PID loop to maintain a leaving temperature of the discharge air temperature setpoint minus 5°F and 2) a proportional only loop maintaining a low limit of 45°F preheat coil discharge air temperature.

Cooling Section:
1. Cooling Coil Valve: N.C. cooling coil valve shall modulate via a DA PID loop to maintain discharge temperature setpoint. During dehumidification cooling coil shall be commanded 100% open. During unoccupied period, if AH is energized for heating, or warm-up, the cooling coil valve shall remain closed.

© 2008 FACILITY DYNAMICS ENGINEERING

VAV AH WITH PREHEAT, CHW COIL & RETURN FAN

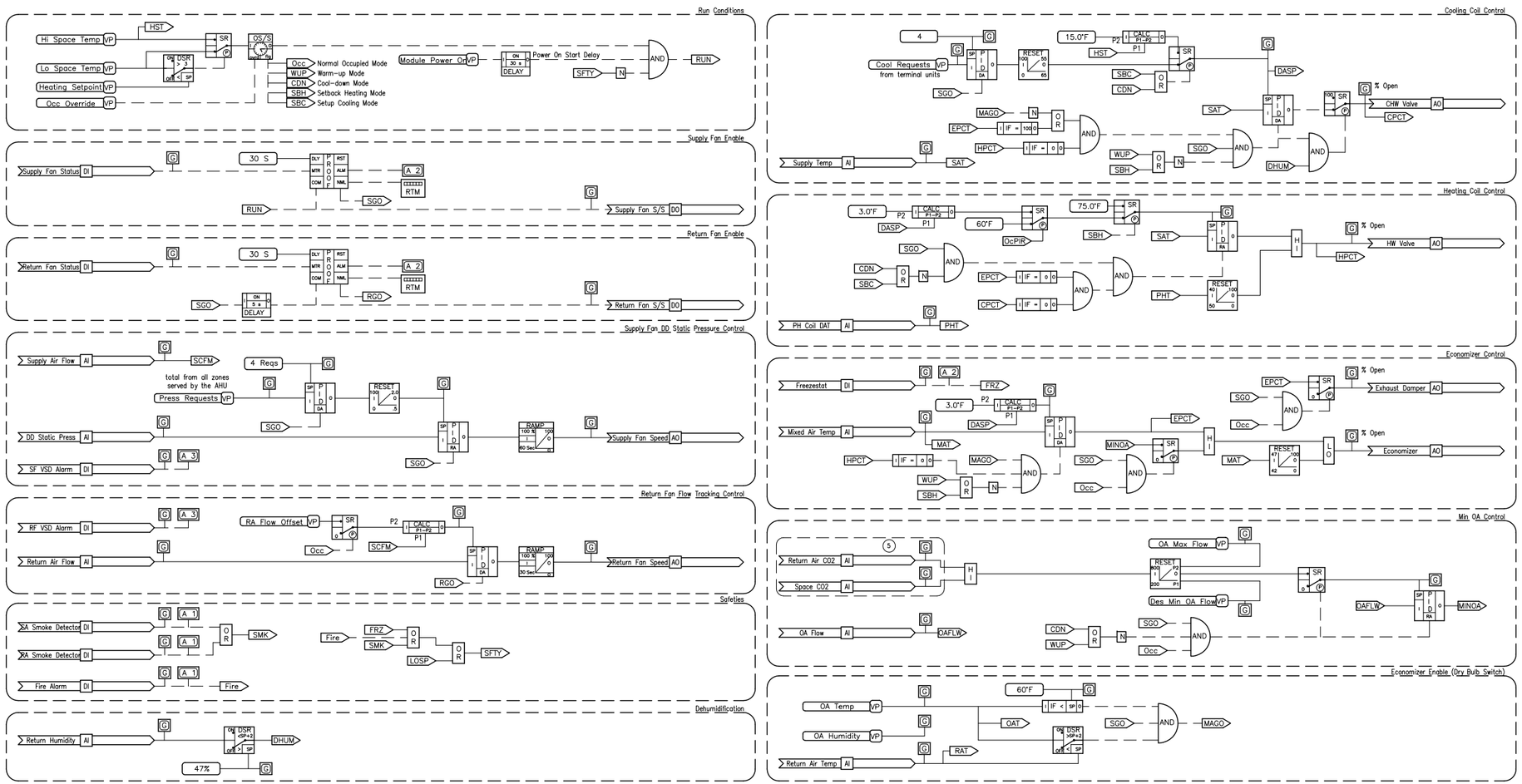

Software Logic Diagram

State of Delaware

Standard Control Drawings

Eng	HJN
Drawn	HJN
Chkd	---
Appd	---
Issued	11/10/2008
Job No.	----
Scale	N/A
Proj Code	

DESIGN REVIEW

VAV AH WITH PREHEAT, CHW COIL & RETURN FAN

00 OF 00
SHEET NUMBER

C-1.01
DWG NUMBER

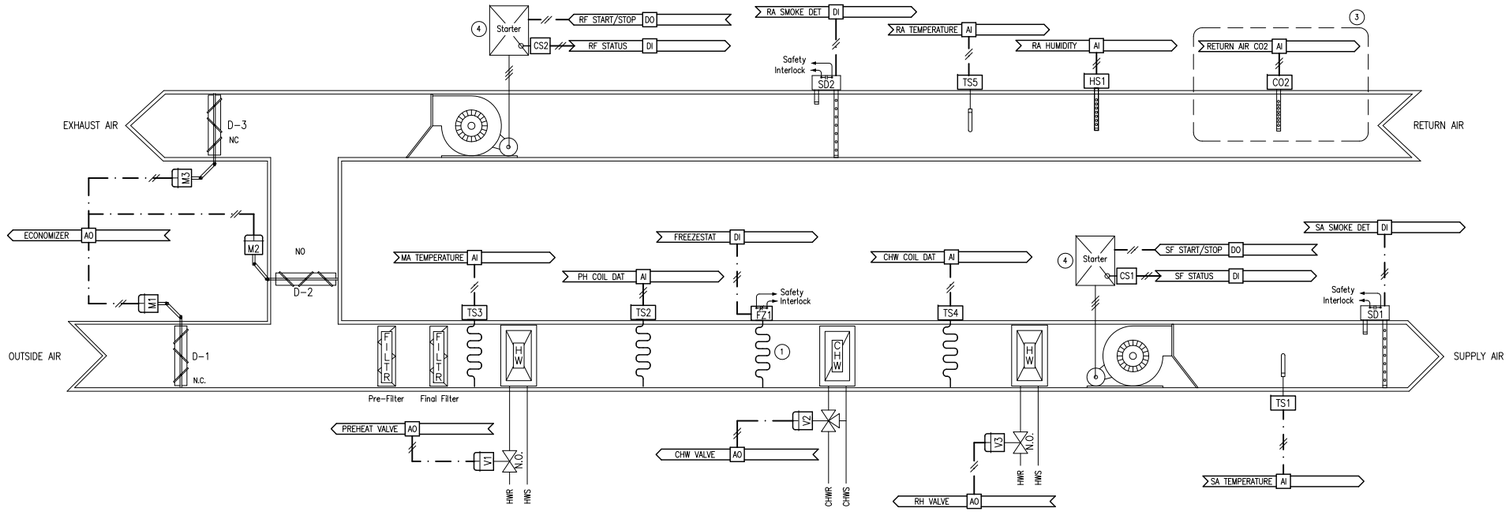

NOTES

1. Provide multiple Freezestats as required to achieve 3ft of element for each 3 sq.ft of coil face area.
2. Provide Return Air or Space CO2 sensors as directed.
3. When applicable per mechanical design.
4. Provide alternate option for "soft start" upgrade from default fan starter.
5. See sheet C-4.00 Electric Ladder Diagrams and C-4.01 Miscellaneous Controls for additional equipment details.

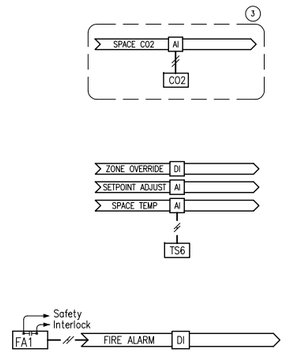

CV AH WITH PREHEAT, CHW & REHEAT COIL, CO2 VENTILATION & RETURN FAN

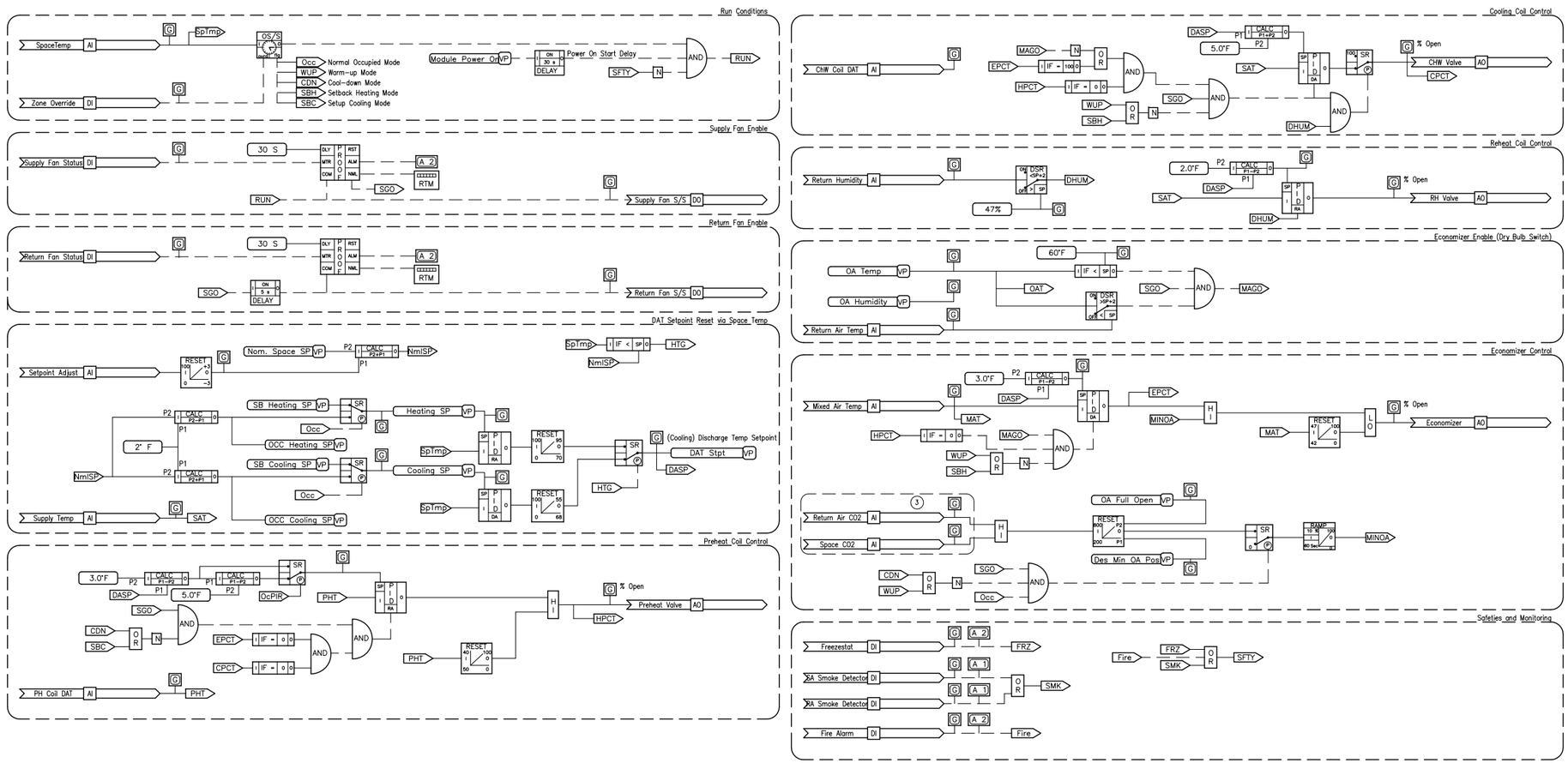

Software Logic Diagram

POINTS LIST

POINT DESCRIPTOR	DI	AI	DO	AO	COMMENTS
SUPPLY FAN START/STOP			•		
SUPPLY FAN STATUS	•				PROOF ALARM
RETURN FAN START/STOP			•		
RETURN FAN STATUS	•				PROOF ALARM
SUPPLY TEMPERATURE		•			
SUPPLY SMOKE DETECTOR	•				
RETURN SMOKE DETECTOR	•				
PREHEAT COIL DISCHARGE TEMP		•			
FREEZESTAT	•				
MIXED AIR TEMPERATURE		•			CRITCAL ALARM < 40°F;
RETURN AIR TEMPERATURE		•			
RETURN AIR HUMIDITY		•			
SPACE TEMPERATURE		•			
SETPOINT ADJUST		•			
ZONE OVERRIDE	•				
CHILLED WATER VALVE				•	
PREHEAT VALVE				•	
REHEAT VALVE				•	
ECONOMIZER				•	
FIRE ALARM	•				
RETURN AIR CO2		•			
SPACE CO2		•			

SEQUENCE OF OPERATION

General: The single zone air handler shall be fully controlled by the BAS. Air handler control logic strategies shall include

1. scheduled occupancy with optimum preoccupancy
2. dry bulb comparison economizer control
3. sequenced heating and cooling coil valve control
4. min outside air damper reset balanced position, minimum outside air control
5. mixed air low limit
6. freeze Safety.
7. smoke Safety

Supply Fan: BAS shall control the starting and stopping of the supply fan as follows:

1. Start/Stop: BAS shall command the operation of the supply fan and it shall run continuously whenever the AH is "energized" as specified for the applicable logic strategies specified in item Air Handlers General.
2. Proof: BAS shall prove fan operation and use the status indication to accumulate runtime. Upon failure of the supply or return fan, BAS shall deenergize the other fan, lockout the run command to both fans, and enunciate an alarm as specified above.

Return Fan: BAS shall control the starting and stopping of the return fan as follows.

1. Start/Stop: BAS shall command the operation of the return fan and it shall run continuously whenever the AH is "energized" as specified for the applicable logic strategies specified in item Air Handlers General.
2. Proof: BAS shall prove fan operation and use the status indication to accumulate runtime.

Return/Exhaust/OA Dampers: BAS shall control the dampers as follows:

1. Closed: When AH is deenergized, dampers shall remain in their "off" positions. When AH is energized during unoccupied period the minimum OA flow setpoint will be 0 cfm which will close the OA damper unless economizer is available.
2. Minimum OA Control: BAS shall maintain the minimum scheduled OA using reset balanced position control to maintain TAB minimum scheduled OA. Demand Ventilation applications will reset the OA open as needed to maintain a maxmimum CO2 setpoint.
3. Demand Ventilation: Applications using CO2 sensor(s) (Return Duct and/or Space) to maintain a maximum CO2 setpoint shall operate as follows: Whenever the fan status is proven and the unit is indexed to occupied mode, the minimum OA (setpoint/position) shall be reset from the TAB calculated minimum (setpoint/position) to full open as the CO2 sensor reading rises from 350ppm (adj.) to 800ppm (adj.).
4. Economizer: BAS shall modulate dampers per the dry bulb comparison economizer detailed in 'Air Handlers General' section 15958. Mixed air temperature setpoint shall be 3°F below the design discharge air temperature setpoint.

Space Temperature Control: Three setpoints shall apply. Normal (72°F adj.)), setback heating (65°F (adj.)), and setback cooling (80°F). These three values shall be the only values changed by the operator to adjust space temperatures. All other deadbands, differentials, etc. shall be calculated in the program logic (unless another means is provided to prohibit overlap of the heating and cooling loops and ensure a dead band such as function block templates that restrict the setpoint input). During the normal periods, separate heating and cooling setpoints shall be calculated.

1. Normal space cooling setpoint: shall be the normal space temperature plus 2°F (adj.)
2. Normal space heating setpoint: shall be the normal space temperature minus 2°F (adj.)

Discharge Temperature Control: The discharge temperature setpoint shall be reset from space temperature as follows:

1. During Heating mode DAT setpoint shall reset via PID loop set to maintain the active heating setpoint from] Ã70°F to 95°F (adj.)
2. During Cooling mode DAT setpoint shall reset via PID loop set to maintain the active cooling setpoint from] Ã55°F to 68°F (adj.)
3. Whenever the unit is energized for the occupied period and the occupancy sensor indicates vacancy for 15 minutes (adj.) discharge temperature cooling setpoint shall be increased by 5°F (adj.) and heating setpoint shall be decreased by 5°F (adj.) until the occupancy sensor detects occupancy again.

Preheating Section:

1. HW Heating Valve: Whenever AH is energized, N.O. valve shall modulate per the higher of
   a) a PID loop to maintain a leaving temperature of the preheat discharge air temperature setpoint minus 5°F and
   b) a proportional only loop maintaining a low limit of 40°F preheat discharge air temperature.

Cooling Section:

1. Cooling Coil Valve: N.C. cooling coil valve shall modulate via a DA PID loop to maintain discharge temperature setpoint. During dehumidification cooling coil shall be commanded 100% open. During unoccupied period, if AH is energized for heating, or warm-up, the cooling coil valve shall remain closed.

Reheating Section:

HW Heating Valve: Whenever AH is energized for dehumidification, N.O. valve shall modulate per the a PID loop to maintain a leaving temperature of the discharge air temperature setpoint minus 2°F

© 2008 FACILITY DYNAMICS ENGINEERING

REVISIONS

NO.	DESCRIPTION	DATE

Facility Dynamics ENGINEERING
6180 Alexander Bell Drive Suite 200
Columbia, MD 21046 (410) 290-0800

State of Delaware

Standard Control Drawings

Eng	HJN
Drawn	HJN
Chkd	---
Appd	---
Issued	11/10/2008
Job No.	----
Scale	N/A
Proj Code	

DESIGN REVIEW

CV AH WITH PREHEAT, CHW & REHEAT COIL, CO2 VENTILATION & RETURN FAN

00 OF 00
SHEET NUMBER

C-1.02

DWG NUMBER

NOTES

1. Provide multiple Freezestats as required to achieve 3ft of element for each 3 sq.ft of coil face area.
2. Provide alternate option for "soft start" upgrade from default fan starter.
3. See C-4.00 Electric Ladder Diagrams and C-4.01 Miscellaneous Controls sheets for additional equipment details.

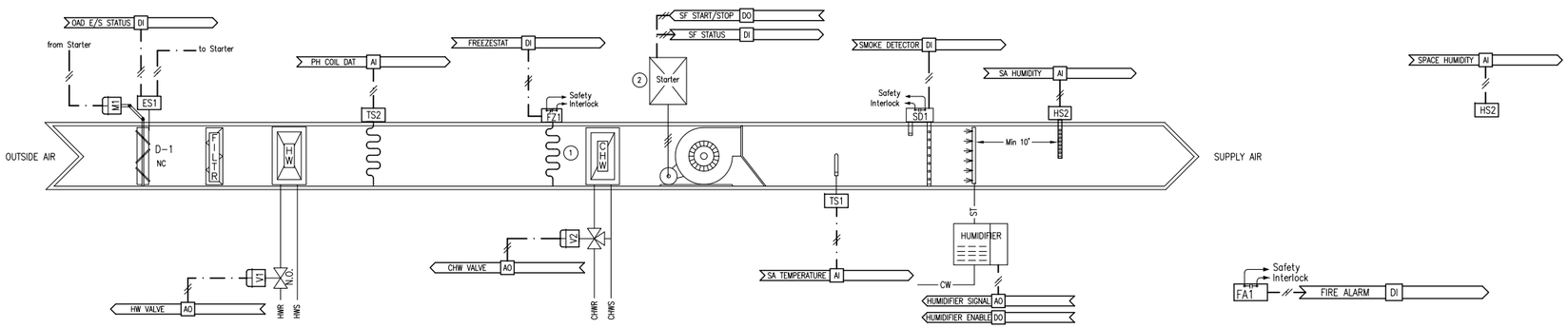

100% OA CV AH WITH HUMIDIFIER, PREHEAT & CHW COIL

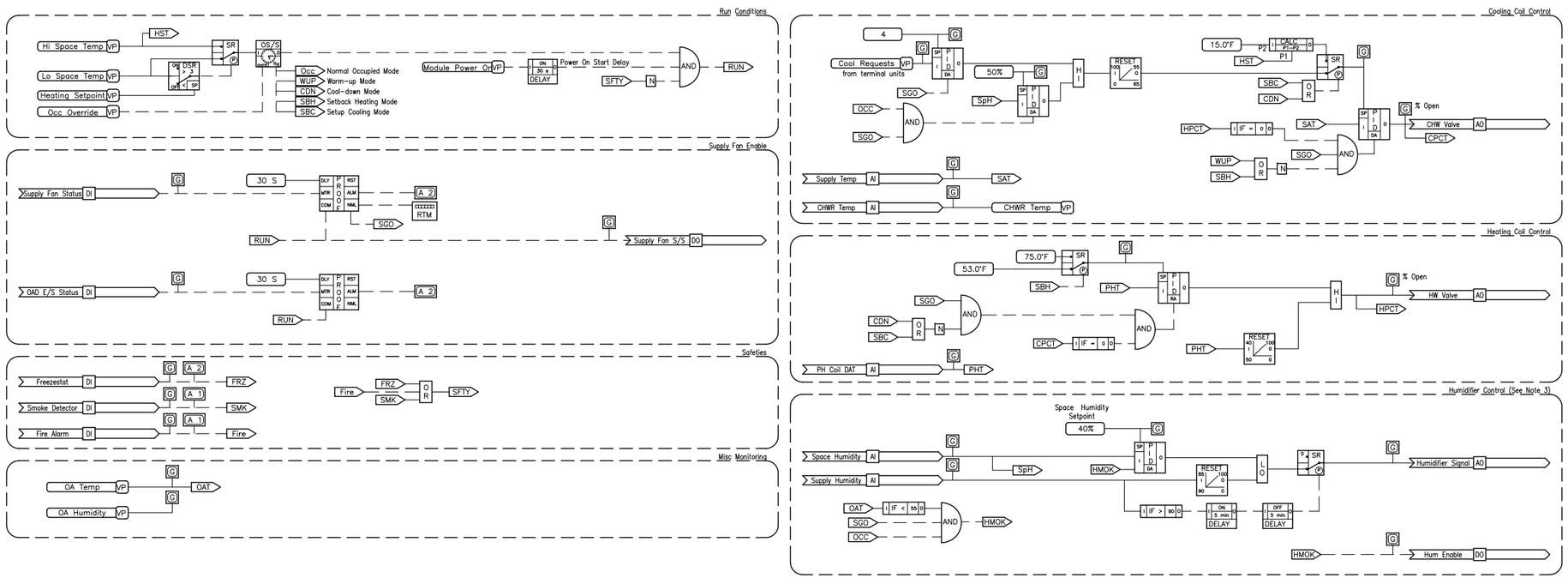

Software Logic Diagram

POINTS LIST

POINT DESCRIPTOR	POINT TYPE DI	AI	DO	AO	COMMENTS
SUPPLY FAN START/STOP			•		
SUPPLY FAN STATUS	•				PROOF ALARM
SMOKE DETECTOR	•				
PREHEAT COIL DISCHARGE TEMP		•			
FREEZESTAT	•				
OA DAMPER END SWITCH STATUS	•				
SUPPLY AIR TEMPERATURE		•			
HUMIDIFIER ENABLE			•		
HUMIDIFIER SIGNAL				•	
SPACE HUMIDITY		•			
SUPPLY HUMIDITY		•			
CHILLED WATER VALVE				•	
PREHEAT VALVE				•	
FIRE ALARM	•				

SEQUENCE OF OPERATION

A. General: The air handler shall be fully controlled by the BAS. Air handler control logic strategies shall include
1. scheduled occupancy with optimum preoccupancy
2. sequenced heating and cooling coil valve control
3. freeze Safety.
4. smoke Safety

Supply Fan: BAS shall control the starting and stopping of the supply fan as follows:
1. Start/Stop: BAS shall command the operation of the supply fan and it shall run continuously whenever the AH is "energized" as specified for the applicable logic strategies specified in item Air Handlers General
2. Proof: BAS shall prove fan operation and use the status indication to accumulate runtime. Upon failure of the supply fan, BAS shall deenergize the supply fan, lockout the run command, and enunciate an alarm as specified above.

OA Dampers: The dampers shall open whenever the Supply Fan is energized and close when it is deenergized. A damper position end switch shall prove the damper open before the fan is allowed to run. Upon failure of the OA damper, FMS shall deenergize the supply fan, lockout the run command, and enunciate an alarm a level 2 alarm.

Discharge Temperature Control Occupied Mode: Whenever the AH is energized during the occupied period, the discharge temperature setpoint shall be reset by a reverse acting PID algorithm outputting a temperature range as follows (PID output can be rescaled if necessary):
a) setpoint shall be reset from 55°F to 65°F both adjustable to maintain the cooling requests at [4] (adj.)

Discharge Temperature Control Unoccupied Mode: When the unit is energized for setback heating during the unoccupied period, the discharge temperature setpoint shall be 75°F (adj.)

Heating Section:
HW Heating Coil Valve: Whenever AH is energized, N.O. heating coil valve shall modulate via a PID loop to maintain 53°F (adj) preheat DAT.

Cooling Section:
Cooling Coil Valve: N.C. cooling coil valve shall modulate via a PID loop to maintain discharge temperature setpoint. During unoccupied period, if AH is energized for heating, or warm-up, the cooling coil valve shall remain closed.

Humidifier: When the AH is energized during occupied periods and the outside air temperature is below 55°F (with 3°F cycle differential), humidifier signal shall modulate via a PID loop to maintain space relative humidity setpoint of 40%, or to limit the maximum discharge humidity to 75% (adj.). Humidifier shall shutdown if the supply duct RH exceeds 90% continuously for 5 minutes.

© 2008 FACILITY DYNAMICS ENGINEERING

REVISIONS

NO.	DESCRIPTION	DATE

Facility Dynamics ENGINEERING
6180 Alexander Bell Drive, Suite 220
Columbia, MD 21046 (410) 290-0800

State of Delaware

Standard Control Drawings

Eng	HJN
Drawn	HJN
Chkd	---
Appd	---
Issued	05/14/2008
Job No.	---
Scale	N/A
Proj Code	

DESIGN REVIEW

100% OA CV AH WITH HUMIDIFIER, PREHEAT & CHW COIL

00 OF 00
SHEET NUMBER

C-1.03
DWG NUMBER

NOTES

1. Locate down stream duct static pressure pick-up tube approximately 2/3 down duct. See floor plans for location.
2. Provide communications interface to the control system for diagnostic point information. Refer to points list for required points to be mapped.
3. Provide multiple Freezestats as required to achieve 3ft of element for each 3 sq.ft of coil face area.
4. See C-4.00 Electric Ladder Diagrams and C-4.01 Miscellaneous Controls sheets for additional equipment details.

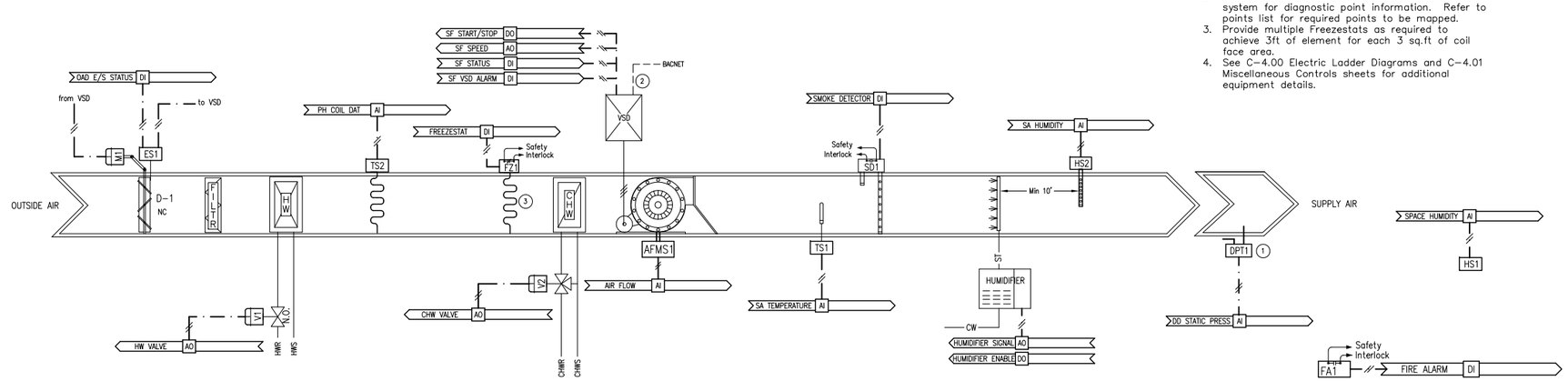

100% OA VAV AH WITH HUMIDIFIER, PREHEAT & CHW COIL

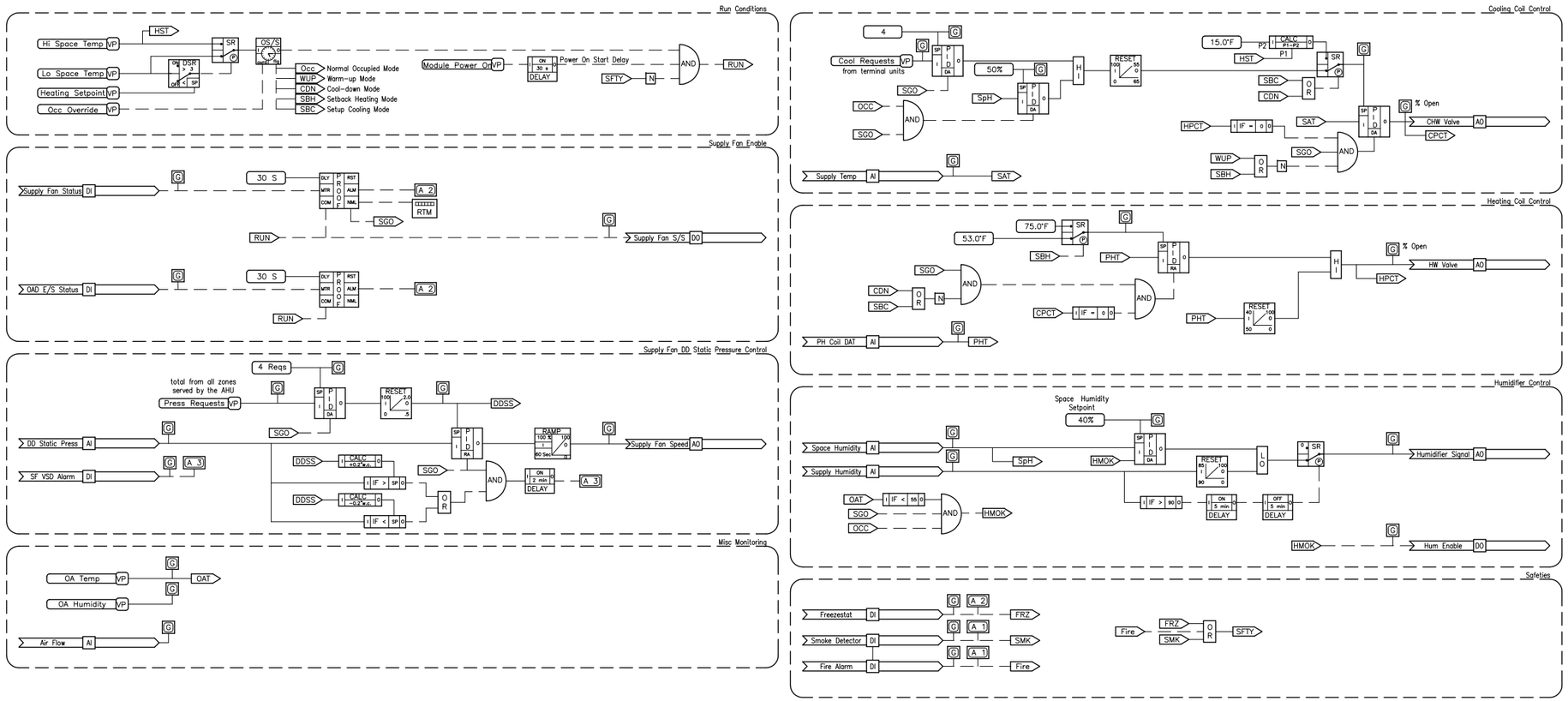

Software Logic Diagram

POINTS LIST

POINT DESCRIPTOR	DI	AI	DO	AO	COMMENTS
SUPPLY FAN START/STOP			•		
SUPPLY FAN STATUS	•				PROOF ALARM
SUPPLY FAN VSD ALARM	•				
SUPPLY FAN SPEED				•	
DOWN DUCT STATIC PRESSURE		•			
AIR FLOW		•			
SMOKE DETECTOR	•				
PREHEAT COIL DISCHARGE TEMP		•			
FREEZESTAT	•				
OA DAMPER END SWITCH STATUS	•				
SUPPLY AIR TEMPERATURE		•			
HUMIDIFIER ENABLE			•		
HUMIDIFIER SIGNAL				•	
SPACE HUMIDITY		•			
SUPPLY HUMIDITY		•			
CHILLED WATER VALVE				•	
PREHEAT VALVE				•	
FIRE ALARM	•				
SUPPLY FAN VFD FAULT	•				NETWORK INTERFACE POINT
SUPPLY FAN VFD FEEDBACK		•			NETWORK INTERFACE POINT
SUPPLY FAN VFD KW		•			NETWORK INTERFACE POINT
SUPPLY FAN BYPASS	•				NETWORK INTERFACE POINT

SEQUENCE OF OPERATION

A. General: The air handler shall be fully controlled by the BAS. Air handler control logic strategies shall include
1. scheduled occupancy with optimum preoccupancy
2. sequenced heating and cooling coil valve control
3. freeze Safety.
4. smoke Safety

Supply Fan: BAS shall control the starting and stopping of the supply fan as follows:
1. Start/Stop: BAS shall command the operation of the supply fan and it shall run continuously whenever the AH is "energized" as specified for the applicable logic strategies specified in item Air Handlers General
2. Proof: BAS shall prove fan operation and use the status indication to accumulate runtime. Upon failure of the supply fan, BAS shall deenergize the supply fan, lockout the run command, and enunciate an alarm as specified above.
3. VSD Control: Whenever the fan is energized, BAS shall control the speed of the VSD to maintain the supply duct static pressure setpoint. On start and stop, the VSD shall ramp to speed and slow down within adjustable acceleration and deceleration limits. BAS shall monitor a common alarm ouput from the drive and enunciate a level 2 alarm when an alarm is indicated.
4. Supply Duct Pressure Setpoint: Setpoint shall be:
   a) Reset between the limits of .5" to 2" as to maintain cooling requests of the VAV boxes at 4 with all values adjustable.

OA Dampers: The dampers shall open whenever the Supply Fan is energized and close when it is deenergized. A damper position end switch shall prove the damper open before the fan is allowed to run. Upon failure of the OA damper, FMS shall deenergize the supply fan, lockout the run command, and enunciate an alarm a level 2 alarm.

Discharge Temperature Control Occupied Mode: Whenever the AH is energized during the occupied period, the discharge temperature setpoint shall be reset by a reverse acting PID algorithm outputting a temperature range as follows (PID output can be rescaled if necessary):
a) setpoint shall be reset from 55°F to 65°F both adjustable to maintain the cooling requests at [4] (adj.)

Discharge Temperature Control Unoccupied Mode: When the unit is energized for setback heating during the unoccupied period, the discharge temperature setpoint shall be 75°F (adj.)

Heating Section:
HW Heating Coil Valve: Whenever AH is energized, N.O. heating coil valve shall modulate via a PID loop to maintain 53°F (adj) preheat DAT.

Cooling Section:
Cooling Coil Valve: N.C. cooling coil valve shall modulate via a PID loop to maintain discharge temperature setpoint. During unoccupied period, if AH is energized for heating, or warm-up, the cooling coil valve shall remain closed.

Humidifier: When the AH is energized during occupied periods and the outside air temperature is below 55°F (with 3°F cycle differential), humidifier signal shall modulate via a PID loop to maintain space relative humidity setpoint of 40%, or to limit the maximum discharge humidity to 75% (adj.). Humidifier shall shutdown if the supply duct RH exceeds 90% continuously for 5 minutes.

REVISIONS

NO.	DESCRIPTION	DATE

Facility Dynamics ENGINEERING
6180 Alexander Bell Drive Suite 220
Columbia, MD 21046 (410) 290-0800

State of Delaware

Standard Control Drawings

Eng	HJN
Drawn	HJN
Chkd	---
Appd	---
Issued	05/14/2008
Job No.	----
Scale	N/A
Proj Code	

DESIGN REVIEW

100% OA VAV AH WITH HUMIDIFIER, PREHEAT & CHW COIL

00 OF 00
SHEET NUMBER

C-1.04
DWG NUMBER

© 2008 FACILITY DYNAMICS ENGINEERING

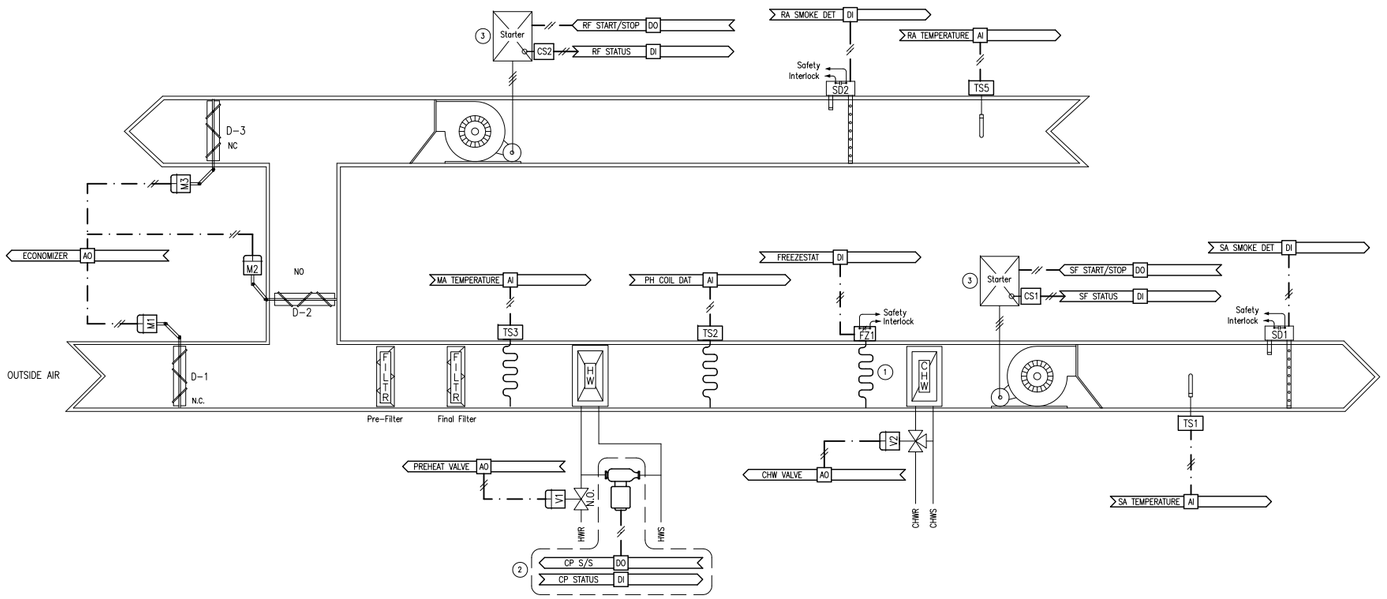

NOTES

1. Provide multiple Freezestats as required to achieve 3ft of element for each 3 sq.ft of coil face area.
2. When applicable per mechanical design.
3. Provide alternate option for "soft start" upgrade from default fan starter.
4. See sheet C-4.00 Electric Ladder Diagrams and C-4.01 Miscellaneous Controls for additional equipment details.

CV AH WITH PREHEAT & CHW COIL, MIN OA DAMPER & RETURN FAN

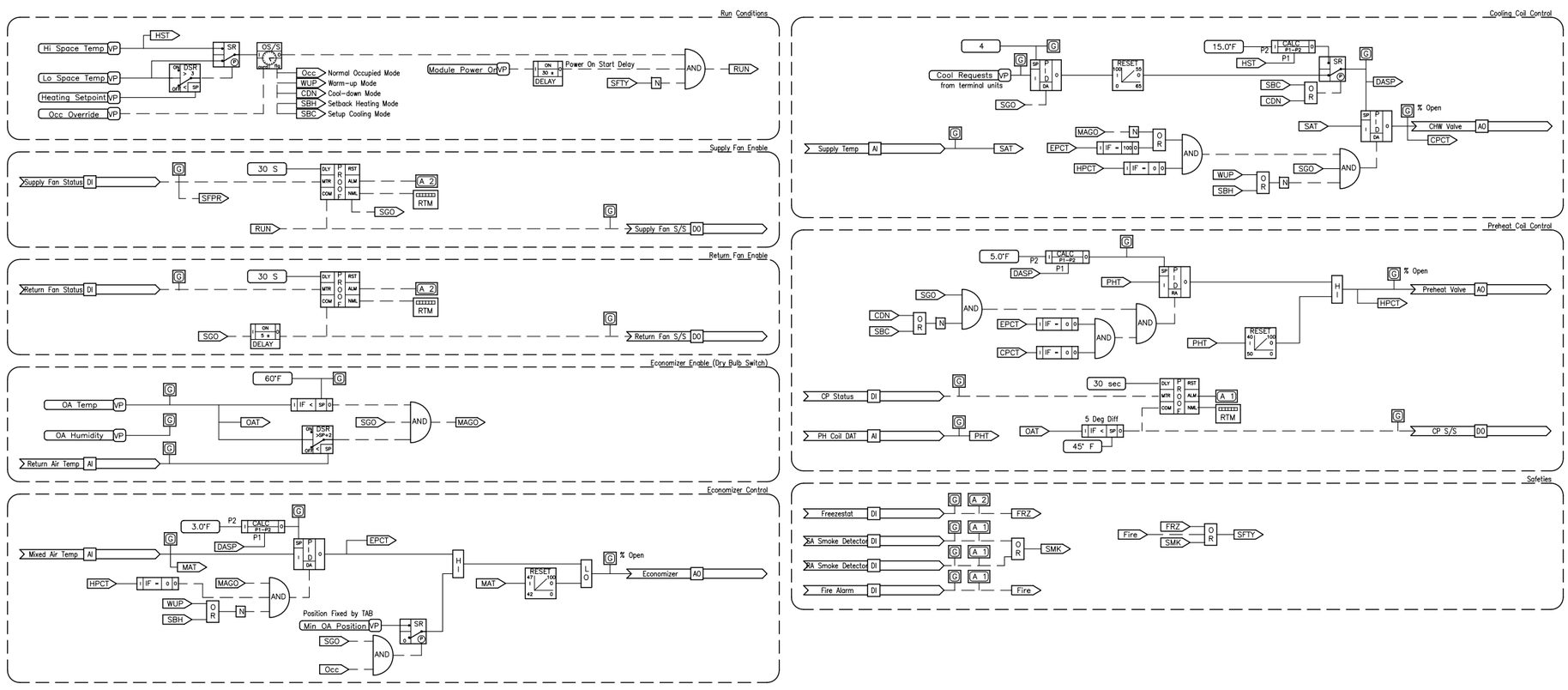

Software Logic Diagram

POINTS LIST

POINT DESCRIPTOR	POINT TYPE DI	AI	DO	AO	COMMENTS
SUPPLY FAN START/STOP			•		
SUPPLY FAN STATUS	•				PROOF ALARM
RETURN FAN START/STOP			•		
RETURN FAN STATUS	•				PROOF ALARM
SUPPLY TEMPERATURE		•			
SUPPLY SMOKE DETECTOR	•				
RETURN SMOKE DETECTOR	•				
PREHEAT COIL DISCHARGE TEMP		•			
FREEZESTAT	•				
MIXED AIR TEMPERATURE		•			CRITCAL ALARM < 40°F;
RETURN AIR TEMPERATURE		•			
CIRCULATING PUMP START/STOP			•		
CIRCULATING PUMP STATUS	•				
CHILLED WATER VALVE				•	
PREHEAT VALVE				•	
ECONOMIZER				•	
FIRE ALARM	•				

SEQUENCE OF OPERATION

General: The air handler shall be fully controlled by the BAS. Air handler control logic strategies shall include

1. scheduled occupancy with optimum preoccupancy
2. dry bulb comparison economizer control
3. sequenced heating and cooling coil valve control
4. balanced position, minimum outside air control
5. mixed air low limit
6. freeze Safety.
7. smoke Safety

Supply Fan: BAS shall control the starting and stopping of the supply fan as follows:
1. Start/Stop: BAS shall command the operation of the supply fan and it shall run continuously whenever the AH is "energized" as specified for the applicable logic strategies specified above.
2. Proof: BAS shall prove fan operation and use the status indication to accumulate runtime. Upon failure of the supply or return fan, BAS shall deenergize the other fan, lockout the run command to both fans, and enunciate an alarm as specified above.

Return Fan: BAS shall control the starting and stopping of the return fan as follows.
1. Start/Stop: BAS shall command the operation of the return fan and it shall run continuously whenever the AH is "energized" as specified for the applicable logic strategies specified above.
2. Proof: BAS shall prove fan operation and use the status indication to accumulate runtime.

Return/Exhaust/OA Dampers: BAS shall control the dampers as follows:
1. Closed: When AH is deenergized, dampers shall remain in their "off" positions. When AH is energized during unoccupied period the OA damper will close unless economizer is available.
2. Minimum OA Control: BAS shall maintain minimum OA flow using the damper controlled fixed strategy.
3. Economizer: BAS shall modulate dampers per the dry bulb comparison economizer detailed in 'Air Handlers General' on page 15958 – 6 above. Mixed air temperature setpoint shall be 3°F below the design discharge air temperature setpoint.

Space Temperature Control: The space temperatures shall be controlled via individual reheat coils as specified below. The setback setpoint for cycling the unit shall be 65°F (adj.) for heating and 80°F (adj.) for cooling both based on the worst zone. Ensure that these setpoints are outside the control range of all box control loops.

Discharge Temperature Control: The discharge temperature setpoint shall be controlled as follows
1. Setpoint shall be reset from 55°F to 65°F both adjustable to maintain the cooling requests at [4] (adj.)
2. When the unit is energized for setback heating during the unoccupied period, the discharge temperature setpoint shall be 75°F (adj.)
3. When the unit is energized for morning cool-down or setback cooling, the discharge setpoint shall be the warmest zone temperature, minus 15°F

Preheating Section:
HW Heating Valve: Whenever AH is energized, N.O. valve shall modulate per the higher of:
a) a PID loop to maintain a leaving temperature of the discharge air temperature setpoint minus 5°F and
b) a proportional only loop maintaining a low limit of 40°F preheat discharge air temperature.

Cooling Section:
Cooling Coil Valve: N.C. cooling coil valve shall modulate via a DA PID loop to maintain discharge temperature setpoint. During unoccupied period, if AH is energized for heating, or warm-up, the cooling coil valve shall remain closed.

© 2008 FACILITY DYNAMICS ENGINEERING

REVISIONS

NO.	DESCRIPTION	DATE

Facility Dynamics ENGINEERING
6180 Alexander Bell Drive Suite 220
Columbia, MD 21046 (410) 290-0800

State of Delaware

Standard Control Drawings

Eng	HJN
Drawn	HJN
Chkd	---
Appd	---
Issued	05/14/2008
Job No.	---
Scale	N/A
Proj Code	

DESIGN REVIEW

CV AH WITH PREHEAT & CHW COIL, MIN OA DAMPER & RETURN FAN

00 OF 00
SHEET NUMBER

C-1.05

DWG NUMBER

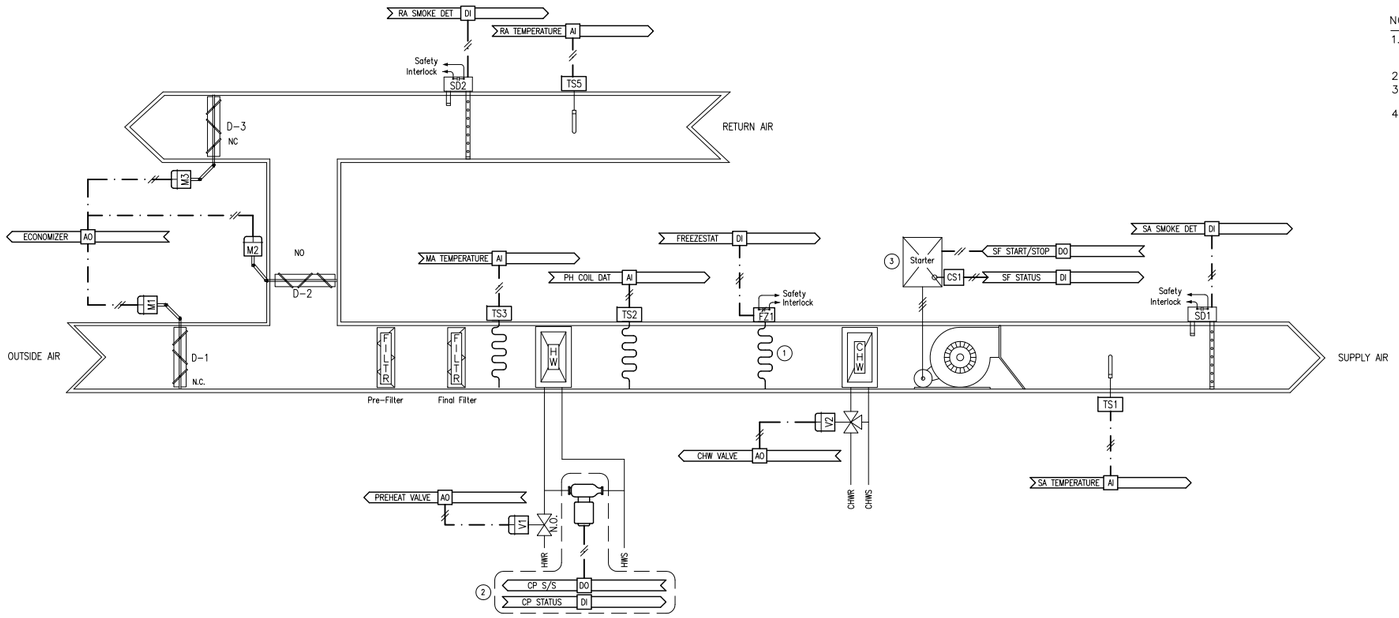

NOTES

1. Provide multiple Freezestats as required to achieve 3ft of element for each 3 sq.ft of coil face area.
2. Where applicable per mechanical design.
3. Provide alternate option for "soft start" upgrade from default fan starter.
4. See sheet C-4.00 Electric Ladder Diagrams & C-4.01 Miscellaneous Controls for additional equipment details.

CV AH WITH PREHEAT & CHW COIL, MIN OA DAMPER, NO RETURN FAN

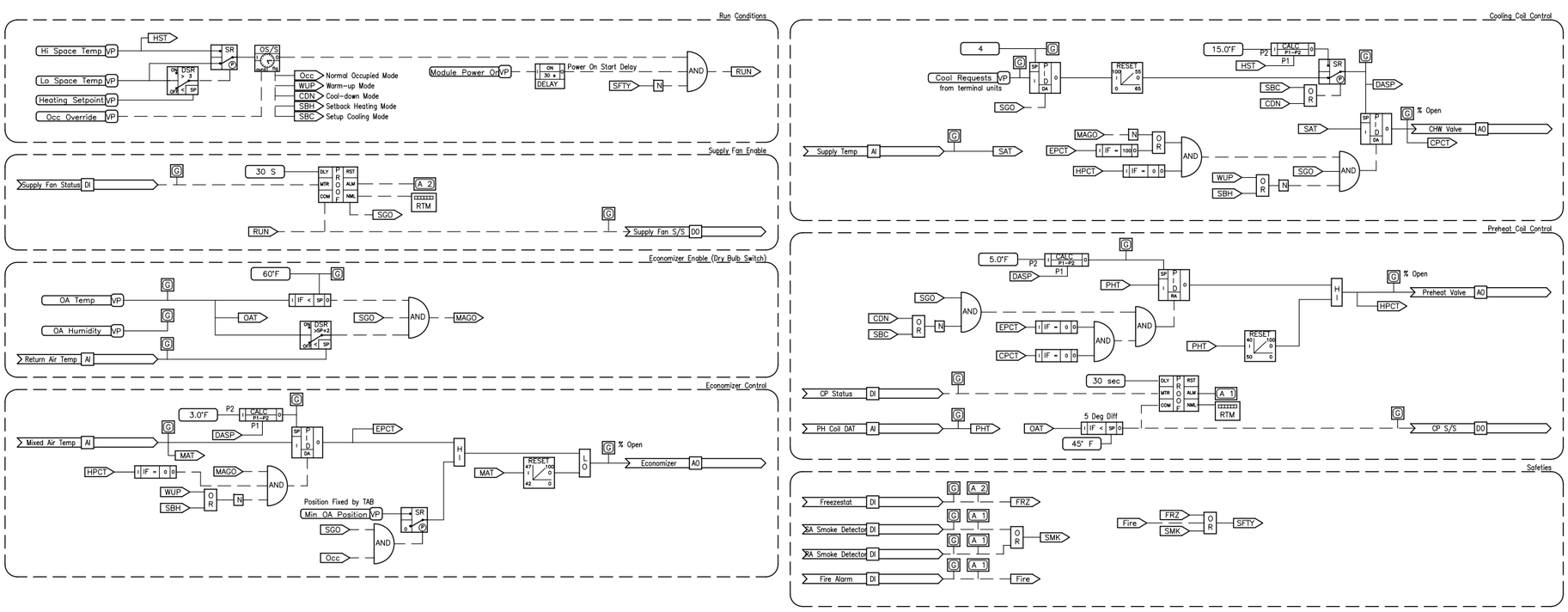

Software Logic Diagram

POINTS LIST

POINT DESCRIPTOR	POINT TYPE DI	AI	DO	AO	COMMENTS
SUPPLY FAN START/STOP			•		
SUPPLY FAN STATUS	•				PROOF ALARM
SUPPLY TEMPERATURE		•			
SUPPLY SMOKE DETECTOR	•				
RETURN SMOKE DETECTOR	•				
PREHEAT COIL DISCHARGE TEMP		•			
FREEZESTAT	•				
MIXED AIR TEMPERATURE		•			CRITCAL ALARM < 40°F;
RETURN AIR TEMPERATURE		•			
CIRCULATING PUMP START/STOP			•		
CIRCULATING PUMP STATUS	•				
CHILLED WATER VALVE				•	
PREHEAT VALVE				•	
ECONOMIZER				•	
FIRE ALARM	•				

SEQUENCE OF OPERATION

General: The air handler shall be fully controlled by the BAS. Air handler control logic strategies shall include
1. scheduled occupancy with optimum preoccupancy
2. dry bulb comparison economizer control
3. sequenced heating and cooling coil valve control
4. balanced position, minimum outside air control
5. mixed air low limit
6. freeze Safety.
7. smoke Safety

Supply Fan: BAS shall control the starting and stopping of the supply fan as follows:
1. Start/Stop: BAS shall command the operation of the supply fan and it shall run continuously whenever the AH is "energized" as specified for the applicable logic strategies specified above.
2. Proof: BAS shall prove fan operation and use the status indication to accumulate runtime. Upon failure of the supply or return fan, BAS shall deenergize the other fan, lockout the run command to both fans, and enunciate an alarm as specified above.

Return/Exhaust/OA Dampers: BAS shall control the dampers as follows:
1. Closed: When AH is deenergized, dampers shall remain in their "off" positions. When AH is energized during unoccupied period the OA damper will close unless economizer is available.
2. Minimum OA Control: BAS shall maintain minimum OA flow using the damper controlled fixed strategy.
3. Economizer: BAS shall modulate dampers per the dry bulb comparison economizer detailed in 'Air Handlers General' above. Mixed air setpoint shall be equal to the discharge air setpoint specified herein minus 3°F.

Space Temperature Control: The space temperatures shall be controlled via individual reheat coils as specified below. The setback setpoint for cycling the unit shall be 65°F (adj.) for heating and 80°F (adj.) for cooling both based on the worst zone. Ensure that these setpoints are outside the control range of all box control loops.

Discharge Temperature Control: The discharge temperature setpoint shall be controlled as follows
1. Setpoint shall be reset from 55°F to 65°F both adjustable to maintain the cooling requests at [4] (adj.)
2. When the unit is energized for setback heating during the unoccupied period, the discharge temperature setpoint shall be 75°F (adj.)
3. When the unit is energized for morning cool-down or setback cooling, the discharge setpoint shall be the warmest zone temperature, minus 15°F

Preheating Section:
HW Heating Valve: Whenever AH is energized, N.O. valve shall modulate per the higher of:
a) a PID loop to maintain a leaving temperature of the discharge air temperature setpoint minus 5°F and
b) a proportional only loop maintaining a low limit of 40°F preheat discharge air temperature.

Circulating Pump: Whenever OA temperature falls below 45°F (adj.) with a 5°F differential, BAS shall energize the circulating pump and monitor status.

Cooling Section:
Cooling Coil Valve: N.C. cooling coil valve shall modulate via a DA PID loop to maintain discharge temperature setpoint. During unoccupied period, if AH is energized for heating, or warm-up, the cooling coil valve shall remain closed.

© 2008 FACILITY DYNAMICS ENGINEERING

REVISIONS

NO.	DESCRIPTION	DATE

Facility Dynamics ENGINEERING
6180 Alexander Bell Drive Suite 220
Columbia, MD 21046 (410) 290-0800

State of Delaware

Standard Control Drawings

Eng	HJN
Drawn	HJN
Chkd	---
Appd	---
Issued	05/14/2008
Job No.	----
Scale	N/A
Proj Code	

DESIGN REVIEW

CV AH WITH PREHEAT & CHW COIL, MIN OA DAMPER, NO RETURN FAN

00 OF 00
SHEET NUMBER

C-1.06
DWG NUMBER

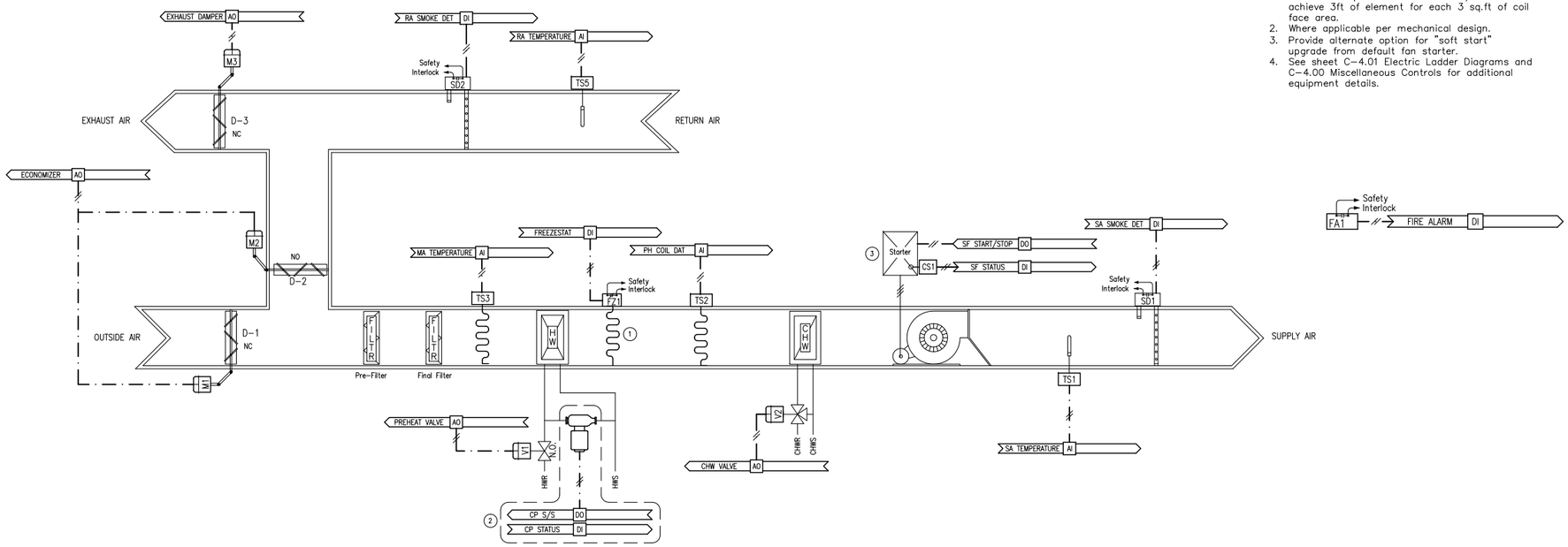

NOTES

1. Provide multiple Freezestats as required to achieve 3ft of element for each 3 sq.ft of coil face area.
2. Where applicable per mechanical design.
3. Provide alternate option for "soft start" upgrade from default fan starter.
4. See sheet C-4.01 Electric Ladder Diagrams and C-4.00 Miscellaneous Controls for additional equipment details.

SINGLE DUCT CV AH WITH PREHEAT & CHW COIL

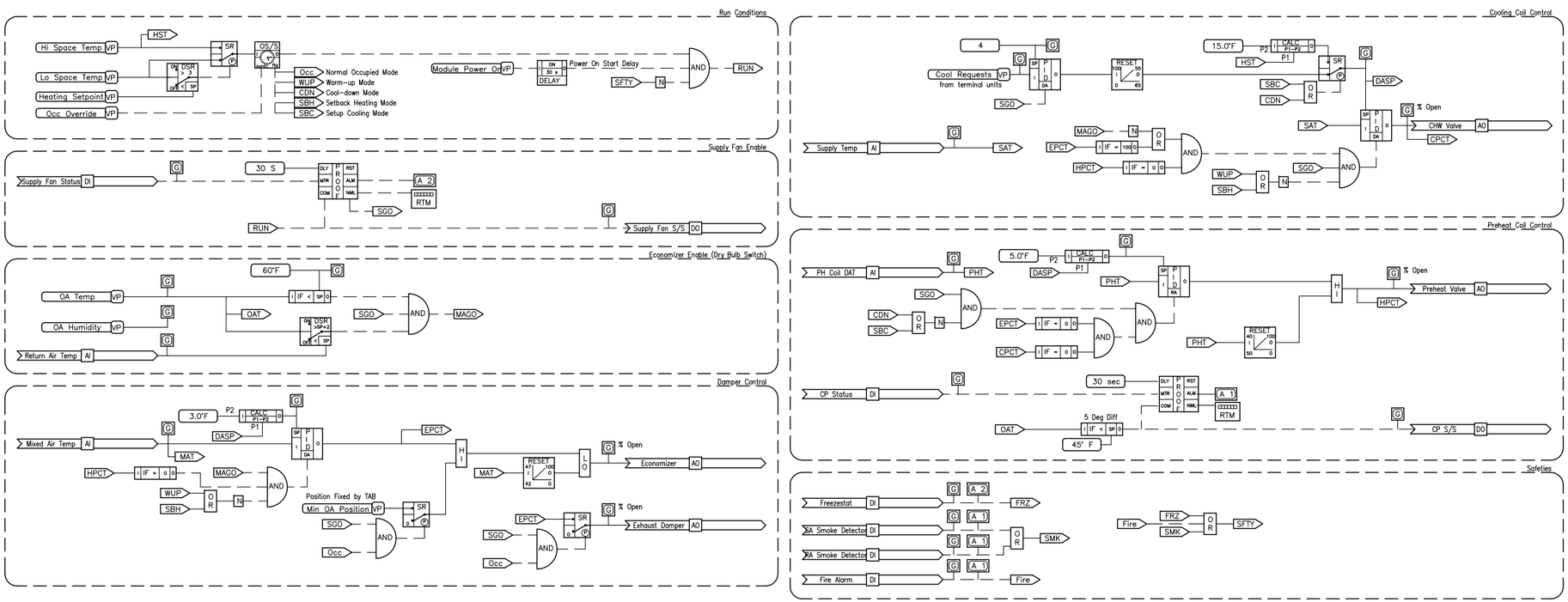

Software Logic Diagram

POINTS LIST

POINT DESCRIPTOR	POINT TYPE DI	AI	DO	AO	COMMENTS
SUPPLY FAN START/STOP			•		
SUPPLY FAN STATUS	•				PROOF ALARM
SUPPLY TEMPERATURE		•			
SUPPLY SMOKE DETECTOR	•				
RETURN SMOKE DETECTOR	•				
PREHEAT COIL DISCHARGE TEMP		•			
FREEZESTAT	•				
MIXED AIR TEMPERATURE		•			CRITCAL ALARM < 40°F;
RETURN AIR TEMPERATURE		•			
CIRCULATING PUMP START/STOP			•		
CIRCULATING PUMP STATUS	•				
CHILLED WATER VALVE				•	
PREHEAT VALVE				•	
ECONOMIZER				•	
EXHAUST AIR DAMPER				•	
FIRE ALARM	•				

SEQUENCE OF OPERATION

General: The air handler shall be fully controlled by the BAS. Air handler control logic strategies shall include

1. scheduled occupancy with optimum preoccupancy
2. dry bulb comparison economizer control
3. sequenced heating and cooling coil valve control
4. balanced position, minimum outside air control
5. mixed air low limit
6. freeze Safety.
7. smoke Safety

Supply Fan: BAS shall control the starting and stopping of the supply fan as follows:
1. Start/Stop: BAS shall command the operation of the supply fan and it shall run continuously whenever the AH is "energized" as specified for the applicable logic strategies specified above.
2. Proof: BAS shall prove fan operation and use the status indication to accumulate runtime. Upon failure of the supply or return fan, BAS shall deenergize the other fan, lockout the run command to both fans, and enunciate an alarm as specified above.

Return/Exhaust/OA Dampers: BAS shall control the dampers as follows:
1. Closed: When AH is deenergized, dampers shall remain in their "off" positions. When AH is energized during unoccupied period the OA damper will close unless economizer is available.
2. Minimum OA Control: BAS shall maintain minimum OA requirements using balanced position control.
3. Economizer: BAS shall modulate dampers per the dry bulb comparison economizer detailed in 'Air Handlers General'. Mixed air temperature setpoint shall be 3°F below the design discharge air temperature setpoint.

Space Temperature Control: The space temperatures shall be controlled via individual reheat coils as specified below. The setback setpoint for cycling the unit shall be 65°F (adj.) for heating and 80°F (adj.) for cooling both based on the worst zone. Ensure that these setpoints are outside the control range of all box control loops.

Discharge Temperature Control: The discharge temperature setpoint shall be controlled as follows
1. Setpoint shall be reset from 55°F to 65°F both adjustable to maintain the cooling requests at [4] (adj.)
2. When the unit is energized for setback heating during the unoccupied period, the discharge temperature setpoint shall be 75°F (adj.)
3. When the unit is energized for morning cool-down or setback cooling, the discharge setpoint shall be the warmest zone temperature, minus 15°F

Preheating Section:
HW Heating Valve: Whenever AH is energized, N.O. valve shall modulate per the higher of:
a) a PID loop to maintain a leaving temperature of the discharge air temperature setpoint minus 5°F and
b) a proportional only loop maintaining a low limit of 40°F preheat discharge air temperature.
Circulating Pump: Whenever OA temperature falls below 45°F (adj.) with a 5°F differential, BAS shall energize the circulating pump and monitor status.

Cooling Section:
Cooling Coil Valve: N.C. cooling coil valve shall modulate via a DA PID loop to maintain discharge temperature setpoint. During unoccupied period, if AH is energized for heating, or warm-up, the cooling coil valve shall remain closed.

© 2008 FACILITY DYNAMICS ENGINEERING

REVISIONS

NO.	DESCRIPTION	DATE

Facility Dynamics ENGINEERING
6180 Alexander Bell Drive Suite 220
Columbia, MD 21046 (410) 290-0800

State of Delaware

Standard Control Drawings

Eng	HJN
Drawn	HJN
Chkd	---
Appd	---
Issued	05/14/2008
Job No.	----
Scale	N/A
Proj Code	

DESIGN REVIEW

SINGLE DUCT CV AH WITH PREHEAT & CHW COIL

00 OF 00
SHEET NUMBER

C-1.07
DWG NUMBER

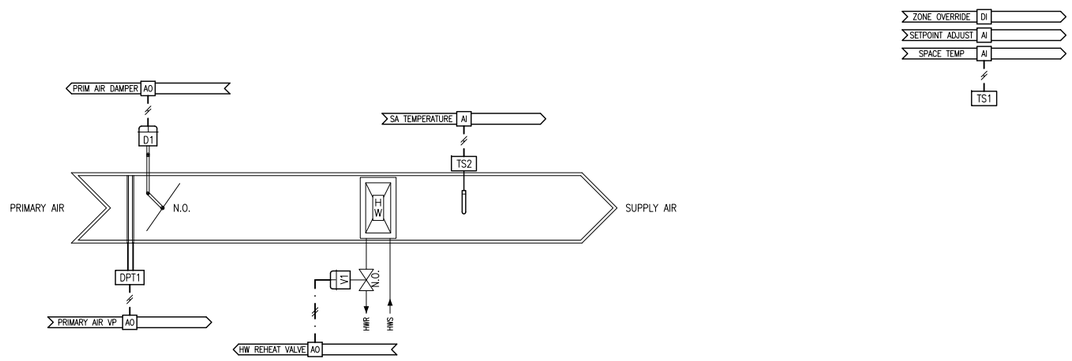

SINGLE DUCT VAV BOX (WITH REHEAT CONTROL)

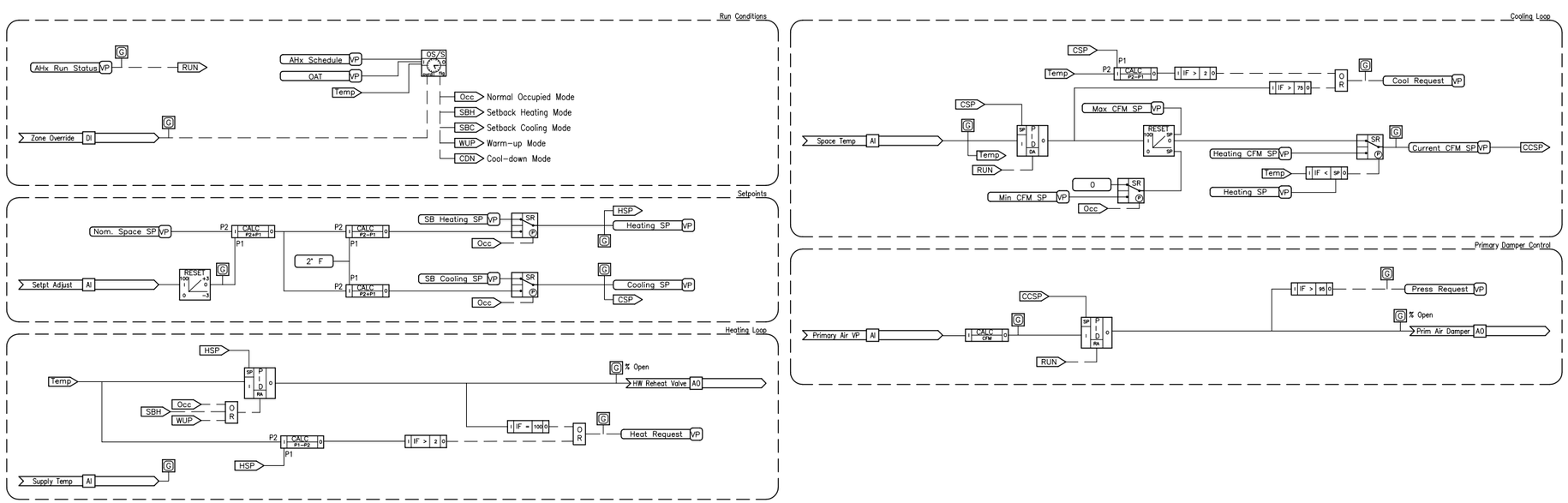

Software Logic Diagram

POINTS LIST

POINT DESCRIPTOR	POINT TYPE DI	AI	DO	AO	COMMENTS
ZONE TEMPERATURE		*			ALARM 3°F ABOVE & BELOW SETPOINT; CRITCAL ALARM < 50°F;
ZONE SETPOINT ADJUST		*			
ZONE OVERRIDE	*				
HW REHEAT VALVE				*	
SUPPLY AIR TEMPERATURE		*			
PRIMARY AIR DAMPER				*	
PRIMARY AIR FLOW (CFM)		*			

SEQUENCE OF OPERATION

General: Control shall be pressure independent with minimum and maximum flow setpoints, scheduled occupancy with optimum preoccupancy and occupancy override.

Space Temperature Control: Three setpoints shall apply. Normal (72°F adj.)), setback heating (65°F (adj.)), and setback cooling (80°F). These three values shall be the only values changed by the operator to adjust space temperatures. All other deadbands, differentials, etc. shall be calculated in the program logic (unless another means is provided to prohibit overlap of the heating and cooling loops and ensure a dead band such as function block templates that restrict the setpoint input). During the normal periods, separate heating and cooling setpoints shall be calculated.

1. Normal space cooling setpoint: shall be the normal space temperature plus 2°F (adj.)
2. Normal space heating setpoint: shall be the normal space temperature minus 2°F (adj.)

Zone Damper: Zone damper shall modulate to maintain zone volume setpoint. All BAS damper PID loops shall be adjusted to minimize damper actuator drive time to extend actuator mean time before failure (MTBF) while meeting setpoint requirements. Zone volume setpoint shall be reset between maximum and minimum volume settings to maintain space temperature cooling setpoint with a 2°F (adj.) reset range. Zone volume setpoint shall go to the heating volume setpoint whenever the space temperature falls below the heating space temperature setpoint.

1. Cooling Minimum Volume setpoint shall be as scheduled on the drawings during the occupied period and shall be set to zero otherwise.
2. Heating Minimum Volume Setpoint: Whenever heating is requested from the box in any period, the minimum volume shall be set to an adjustable heating setpoint airflow.

Hydronic Reheat: N.O. Zone reheat coil valve shall modulate in a PI loop to maintain space temperature heating setpoint as defined above with a 2°F throttling range. Valve shall be closed whenever the parent AH is off.

Heating Request: This terminal shall issue a "heating request" as follows"

1. Whenever the reheat output is at 100%, or
2. Whenever the space temperature falls below the throttling range of the heating loop

Cooling Request: This terminal shall issue a "cooling request" as follows"

1. Whenever the zone damper output is at 100% (full cooling), or whenever the space temperature rises above the throttling range of the cooling loop

© 2008 FACILITY DYNAMICS ENGINEERING

REVISIONS

NO.	DESCRIPTION	DATE

Facility Dynamics ENGINEERING
6780 Alexander Bell Drive, Suite 220
Columbia, MD 21046; (410) 290-0800

State of Delaware

Standard Control Drawings

Eng	HJN
Drawn	HJN
Chkd	---
Appd	---
Issued	05/14/2008
Job No.	----
Scale	N/A
Proj Code	

DESIGN REVIEW

SINGLE DUCT VAV BOX (WITH REHEAT CONTROL)

00 OF 00
SHEET NUMBER

C-2.00
DWG NUMBER

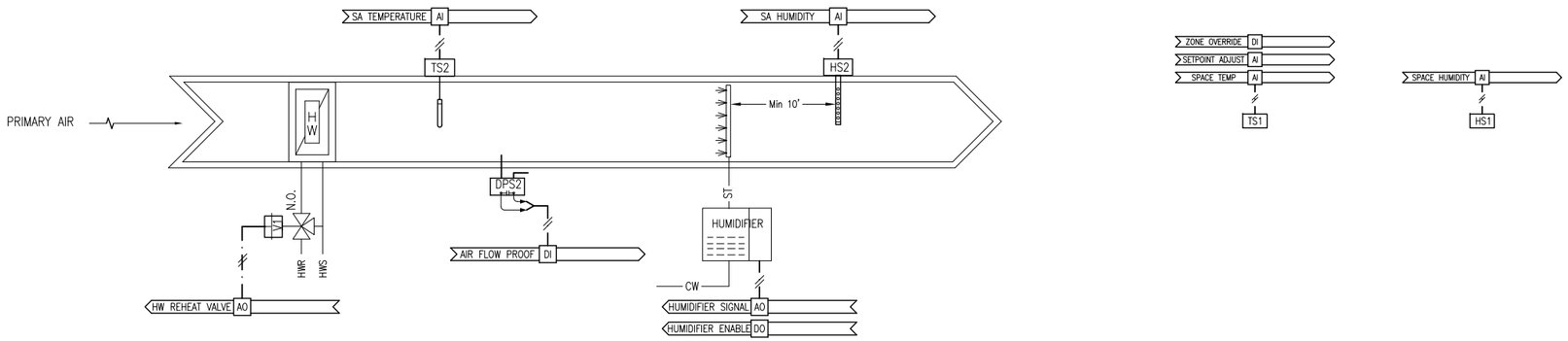

DUCT MOUNTED HW REHEAT COIL AND HUMIDIFIER

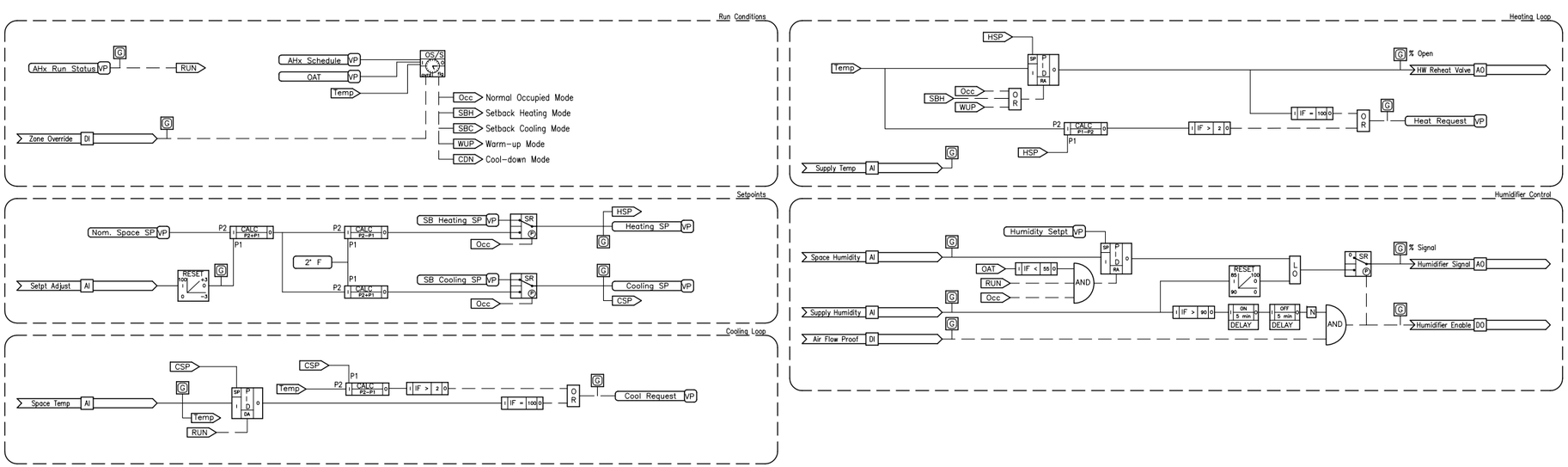

Software Logic Diagram

POINTS LIST

POINT DESCRIPTOR	POINT TYPE DI	AI	DO	AO	COMMENTS
HUMIDIFIER ENABLE			•		
HUMIDIFIER SIGNAL				•	
ZONE TEMPERATURE		•			ALARM 3°F ABOVE & BELOW SETPOINT; CRITCAL ALARM < 50°F;
ZONE SETPOINT ADJUST		•			
ZONE OVERRIDE	•				
AIR FLOW PROOF	•				
HW REHEAT VALVE				•	
SUPPLY AIR TEMPERATURE		•			
SUPPLY AIR HUMIDITY		•			
ZONE HUMIDITY		•			

SEQUENCE OF OPERATION

General: Control shall be for reheat space temperature, space humidification, scheduled occupancy with optimum preoccupancy and occupancy override.

Space Temperature Control: Three setpoints shall apply. Normal (72°F adj.)), setback heating (65°F (adj.)), and setback cooling (80°F). These three values shall be the only values changed by the operator to adjust space temperatures. All other deadbands, differentials, etc. shall be calculated in the program logic (unless another means is provided to prohibit overlap of the heating and cooling loops and ensure a dead band such as function block templates that restrict the setpoint input). During the normal periods, separate heating and cooling setpoints shall be calculated.

1. Normal space cooling setpoint: shall be the normal space temperature plus 2°F (adj.)
2. Normal space heating setpoint: shall be the normal space temperature minus 2°F (adj.)

Hydronic Reheat: N.O. Zone reheat coil valve shall modulate in a PI loop to maintain space temperature heating setpoint as defined above with a 2°F throttling range. Valve shall be closed whenever the parent AH is off.

Heating Request: This terminal shall issue a "heating request" as follows"

1. Whenever the reheat output is at 100%, or
2. Whenever the space temperature falls below the throttling range of the heating loop

Cooling Request: This terminal shall issue a "cooling request" as follows"

1. Whenever the calculated cooling PID output is at 100%, or
2. Whenever the space temperature rises above the throttling range of the cooling loop

Humidifier–Self Contained Steam Generator: BAS shall control the output of the humidifier via 0–10v signal and an enable signal. A single output with a switching relay is acceptable if no DOs are available on the controller for the enable. During periods when normal temperatures are in effect and the outside air temperature is below 55°F (with 3°F cycle differential) humidifier shall be enabled. BAS shall use a RA PID loop to maintain space relative humidity setpoint of 40%, or to limit the maximum discharge humidity to 75% (adj.). Humidifier shall be disabled if the supply duct RH exceeds 90% continuously for 5 minutes

© 2008 FACILITY DYNAMICS ENGINEERING

REVISIONS

NO.	DESCRIPTION	DATE

Facility Dynamics ENGINEERING
6180 Alexander Bell Drive Suite 220
Columbia, MD 21046 (410) 290-0800

State of Delaware

Standard Control Drawings

Eng	HJN
Drawn	HJN
Chkd	---
Appd	---
Issued	05/14/2008
Job No.	----
Scale	N/A
Proj Code	

DESIGN REVIEW

DUCT MOUNTED HW REHEAT COIL AND HUMIDIFIER

00 OF 00
SHEET NUMBER

C-2.01
DWG NUMBER

NOTES

1. Where pre-approved by owner.
2. Physical configuration of FCU to be determined by designer including fan draw or blow.
3. See C-4.00 Electric Ladder Diagrams and C-4.01 Miscellaneous Controls sheets for additional equipment details.

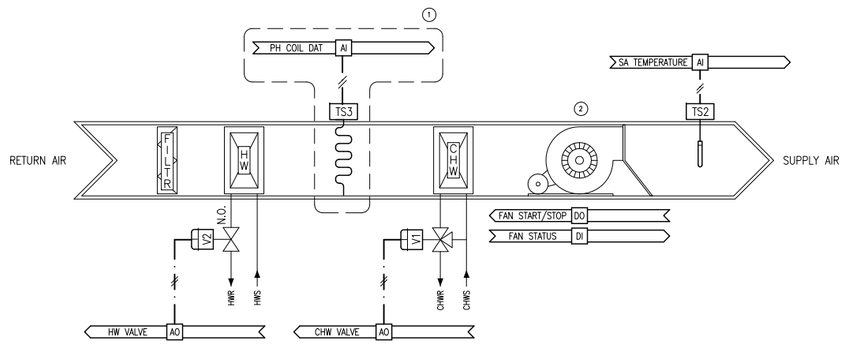

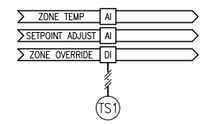

LOCATE AS SHOWN ON MECHANICAL PLANS

FAN COIL UNIT

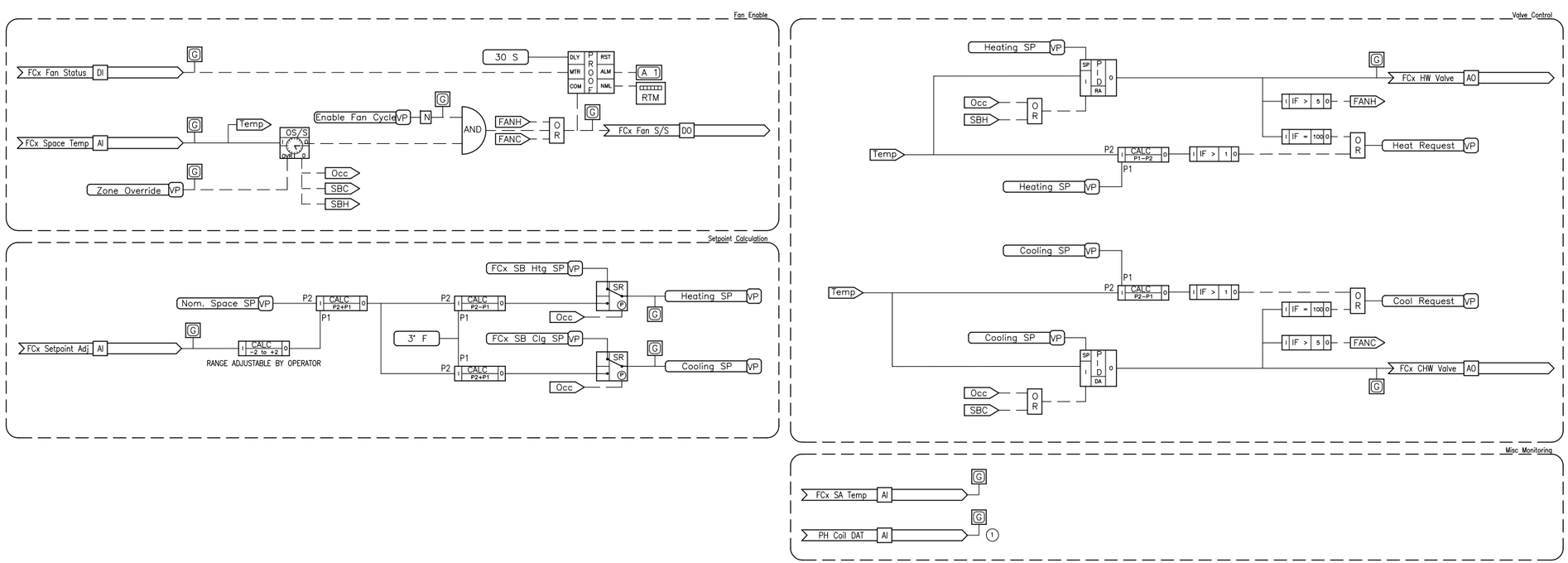

Software Logic Diagram

POINTS LIST

POINT DESCRIPTOR	POINT TYPE DI	AI	DO	AO	COMMENTS
FCU-X FAN START/STOP			•		
FCU-X FAN STATUS	•				
FCU-X ZONE TEMPERATURE		•			ALARM 3°F ABOVE & BELOW SETPOINT; CRITCAL ALARM < 50°F;
FCU-X ZONE SETPOINT ADJUST		•			
FCU-X ZONE OVERRIDE	•				
FCU-X CHW VALVE				•	
FCU-X HW VALVE				•	
FCU-X SUPPLY AIR TEMPERATURE		•			
FCU-X PREHEAT COIL TEMPERATURE		•			

SEQUENCE OF OPERATION

General: Control shall include scheduled occupancy with optimimum preoccupancy, occupancy override, and reheat control as specified below. Schedule shall be the same as any associated AH.

Space Temperature Control: Three setpoints shall apply. Normal (72°F adj.)), setback heating (65°F (adj.)), and setback cooling (80°F). These three values shall be the only values changed by the operator to adjust space temperatures. All other deadbands, differentials, etc. shall be calculated in the program logic (unless another means is provided to prohibit overlap of the heating and cooling loops and ensure a dead band such as function block templates that restrict the setpoint input). During the normal periods, separate heating and cooling setpoints shall be calculated.

1. Normal space cooling setpoint: shall be the normal space temperature plus 2°F (adj.)
2. Normal space heating setpoint: shall be the normal space temperature minus 2°F (adj.)

Fan: Fan shall be enabled and run continuously during occupied mode with an operator adjustable option to deenenergize the fan unless the unit is in heating or cooling mode. During unoccupied mode, fan shall be deenergized except as required to maintain setback temperature setpoints for both heating and cooling with a cycle differential of 3°f (adj.). Bas shall prove fan operation and use the status indication to accumulate runtime.

Valves: Heating and cooling control valves shall cycle as required to maintain space temperature setpoint for the associated mode (heating or cooling). Programming shall be implemented to prevent overlap of the heating and cooling valves.

Heating Request: This unit shall issue a "heating request" to the HW system as follows:

1. Whenever the heating output is at 100%, or
2. Whenever the space temperature falls below the throttling range of the heating loop.

Cooling Request: This unit shall issue a "cooling request" to the CHW system as follows:

1. Whenever the cooling output is at 100% (full cooling), or
2. Whenever the space temperature rises above the throttling range of the cooling loop.

REVISIONS

NO.	DESCRIPTION	DATE

Facility Dynamics ENGINEERING
6180 Alexander Bell Drive Suite 220
Columbia, MD 21046 (410) 290-0800

State of Delaware

Standard Control Drawings

Eng	HJN
Drawn	HJN
Chkd	---
Appd	---
Issued	05/14/2008
Job No.	----
Scale	N/A
Proj Code	

DESIGN DOCUMENT

FAN COIL UNIT

00 OF 00
SHEET NUMBER

C-2.02
DWG NUMBER

© 2008 FACILITY DYNAMICS ENGINEERING

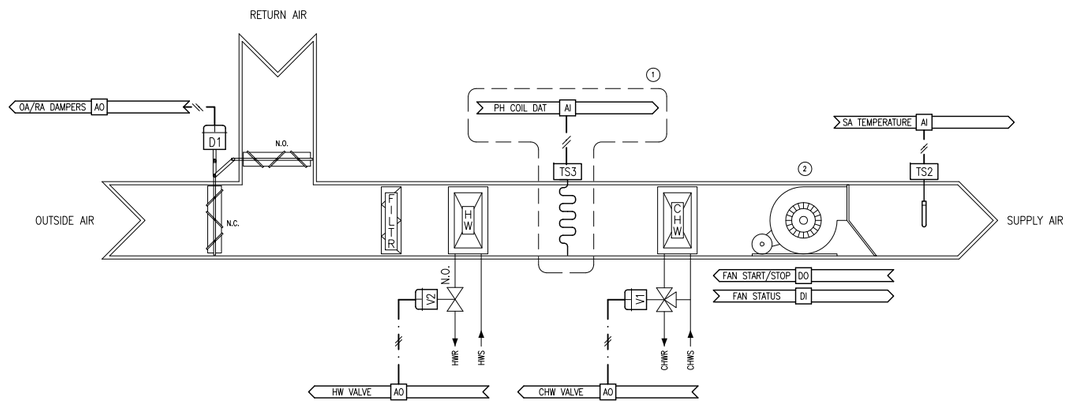

NOTES

1. Where pre-approved by owner.
2. Physical configuration of FCU to be determined by designer including fan draw or blow.

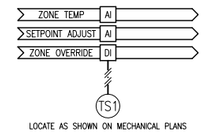

FAN COIL UNIT WITH OUTSIDE AIR

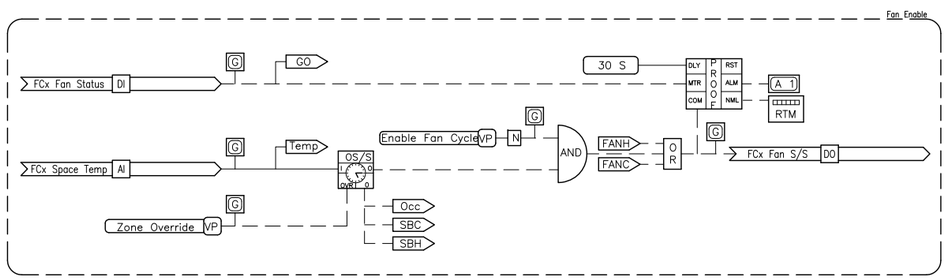

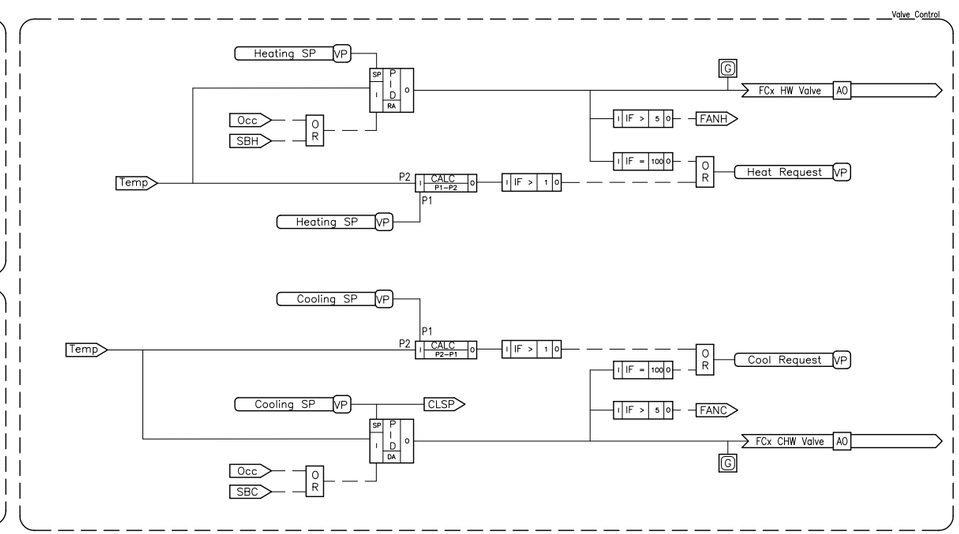

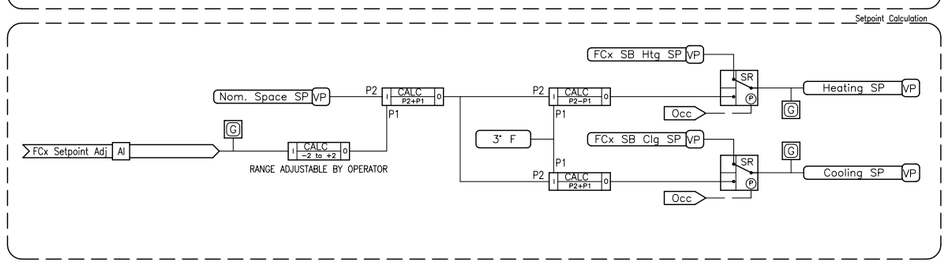

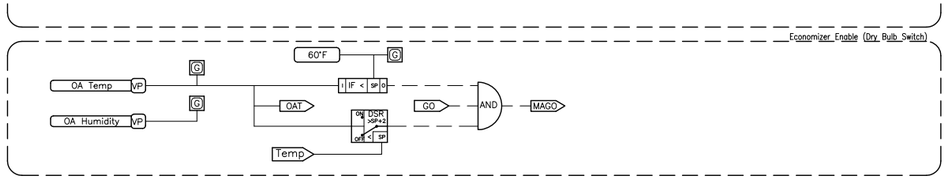

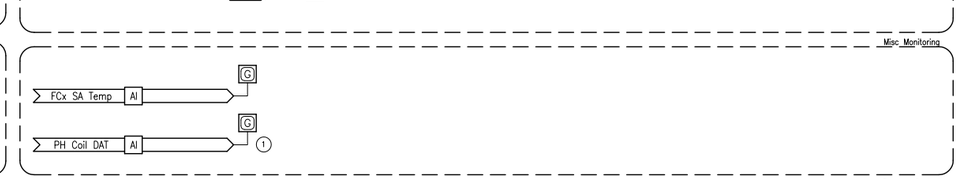

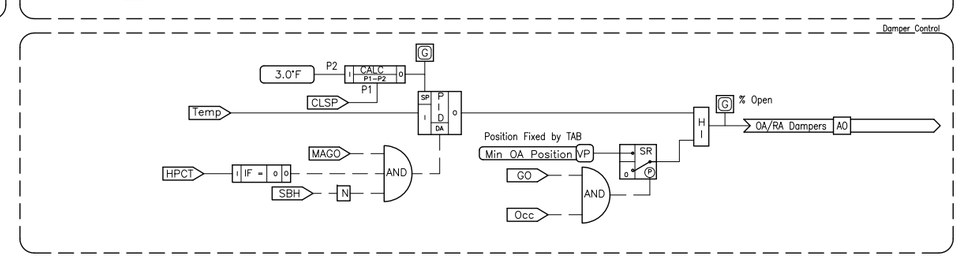

Software Logic Diagram

POINTS LIST

POINT DESCRIPTOR	POINT TYPE DI	AI	DO	AO	COMMENTS
FCU-X FAN START/STOP			•		
FCU-X FAN STATUS	•				
FCU-X ZONE TEMPERATURE		•			ALARM 3°F ABOVE & BELOW SETPOINT; CRITCAL ALARM < 50°F;
FCU-X ZONE SETPOINT ADJUST		•			
FCU-X ZONE OVERRIDE	•				
FCU-X CHW VALVE				•	
FCU-X HW VALVE				•	
FCU-X SUPPLY AIR TEMPERATURE		•			
FCU-X PREHEAT COIL TEMPERATURE		•			SEE NOTE 1
FCU-X OA/RA DAMPERS				•	

SEQUENCE OF OPERATION

GENERAL:
1. FAN COIL UNIT SHALL PROVIDE ZONE TEMPERATURE CONTROL BY HYDRONIC HEATING OR COOLING AND AIR SIDE ECONOMIZER AS REQUIRED.
2. SCHEDULE SHALL BE THE SAME AS THE AHU'S IN THE BUILDING. REFER TO SECTION 15958 FOR AIR HANDLER SCHEDULE AND OPERATING MODE REQUIREMENTS. ALL OF THESE APPLY TO THIS UNIT TYPE.

FAN: FAN SHALL BE ENABLED AND RUN CONTINUOUSLY DURING OCCUPIED MODE WITH AN OPERATOR ADJUSTABLE OPTION TO DEENENERGIZE THE FAN UNLESS THE UNIT IS IN HEATING OR COOLING MODE. DURING UNOCCUPIED MODE, FAN SHALL BE DEENERGIZED EXCEPT AS REQUIRED TO MAINTAIN SETBACK TEMPERATURE SETPOINTS FOR BOTH HEATING AND COOLING WITH A CYCLE DIFFERENTIAL OF 3°F (ADJ.). BAS SHALL PROVE FAN OPERATION AND USE THE STATUS INDICATION TO ACCUMULATE RUNTIME.

VALVES: HEATING AND COOLING CONTROL VALVES SHALL CYCLE AS REQUIRED TO MAINTAIN SPACE TEMPERATURE SETPOINT FOR THE ASSOCIATED MODE (HEATING OR COOLING). PROGRAMMING SHALL BE IMPLEMENTED TO PREVENT OVERLAP OF THE HEATING AND COOLING VALVES.

OA/RA DAMPERS: BAS SHALL CONTROL THE DAMPERS AS FOLLOWS:
1. CLOSED: WHEN THE UNIT IS IN UNOCCUPIED OR WARM-UP MODE, DAMPERS SHALL REMAIN IN THEIR "OFF" POSITIONS. WHEN THE UNIT IS IN COOL-DOWN MODE, THE DAMPERS SHALL REMAIN IN THEIR "OFF" POSITIONS, UNLESS ECONOMIZER IS AVAILABLE.
2. MINIMUM OA CONTROL: DURING THE OCCUPIED PERIOD, OA/RA DAMPERS SHALL NEVER BE POSITIONED LESS THAN THE POSITION SET BY TAB FOR THE REQUIRED MINIMUM OA VENTILATION RATE.
3. ECONOMIZER: WHENEVER UNIT IS ENERGIZED AND OA TEMPERATURE IS BELOW ZONE TEMPERATURE WITH A 2°F CYCLE DIFFERENTIAL AND OA TEMPERATURE IS ABOVE 40°F (ADJ.) BAS SHALL MODULATE THE OA/RA DAMPERS TO MAINTAIN SPACE COOLING TEMPERATURE SETPOINT MINUS 1° (ADJ.).

HEATING REQUEST: THIS TERMINAL SHALL ISSUE A "HEATING REQUEST" TO THE HW SYSTEM AS FOLLOWS:
1. WHENEVER THE REHEAT OUTPUT IS AT 100%, OR
2. WHENEVER THE SPACE TEMPERATURE FALLS BELOW THE THROTTLING RANGE OF THE HEATING LOOP.

COOLING REQUEST: THIS TERMINAL SHALL ISSUE A "COOLING REQUEST" TO THE PARENT AHU AS FOLLOWS:
1. WHENEVER THE ZONE DAMPER OUTPUT IS AT 100% (FULL COOLING), OR
2. WHENEVER THE SPACE TEMPERATURE RISES ABOVE THE THROTTLING RANGE OF THE COOLING LOOP.

ZONE TEMPERATURE SETPOINT: THREE SETPOINTS SHALL APPLY. NORMAL (72°F ADJ.), SETBACK HEATING (65°F (ADJ.)), AND SETBACK COOLING (80°F). THESE THREE VALUES SHALL BE THE ONLY VALUES CHANGED BY THE OPERATOR TO ADJUST SPACE TEMPERATURES. ALL OTHER DEADBANDS, DIFFERENTIALS, ETC. SHALL BE CALCULATED IN THE PROGRAM LOGIC (UNLESS ANOTHER MEANS IS PROVIDED TO PROHIBIT OVERLAP OF THE HEATING AND COOLING LOOPS AND ENSURE A DEAD BAND SUCH AS FUNCTION BLOCK TEMPLATES THAT RESTRICT THE SETPOINT INPUT). DURING THE NORMAL PERIODS, SEPARATE HEATING AND COOLING SETPOINTS SHALL BE CALCULATED.

1. NORMAL SPACE COOLING SETPOINT: SHALL BE THE NORMAL SPACE TEMPERATURE PLUS 2°F (ADJ.)
2. NORMAL SPACE HEATING SETPOINT: SHALL BE THE NORMAL SPACE TEMPERATURE MINUS 2°F (ADJ.)

© 2008 FACILITY DYNAMICS ENGINEERING

REVISIONS

NO.	DESCRIPTION	DATE

Facility Dynamics ENGINEERING
6180 Alexander Bell Drive Suite 220
Columbia, MD 21046 (410) 290-0800

State of Delaware
Standard Control Drawings

Eng	HJN
Drawn	HJN
Chkd	---
Appd	---
Issued	05/14/2008
Job No.	----
Scale	N/A
Proj Code	

DESIGN REVIEW

FAN COIL UNIT WITH OUTSIDE AIR

00 OF 00
SHEET NUMBER

C-2.03
DWG NUMBER

NOTES

1. Provide 2-position, line-size ball valve with position indication.
2. Connect points to unit terminal strip. Refer to manufacturer's installtion instructions.
3. See C-4.00 Electric Ladder Diagrams and C-4.01 Miscellaneous Controls sheets for additional equipment details.

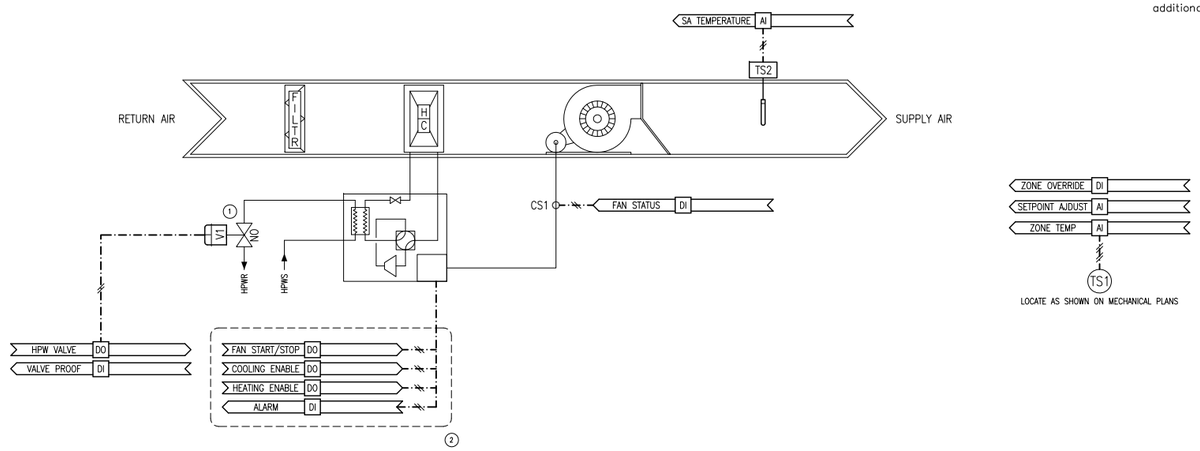

WATER SOURCE HEAT PUMP

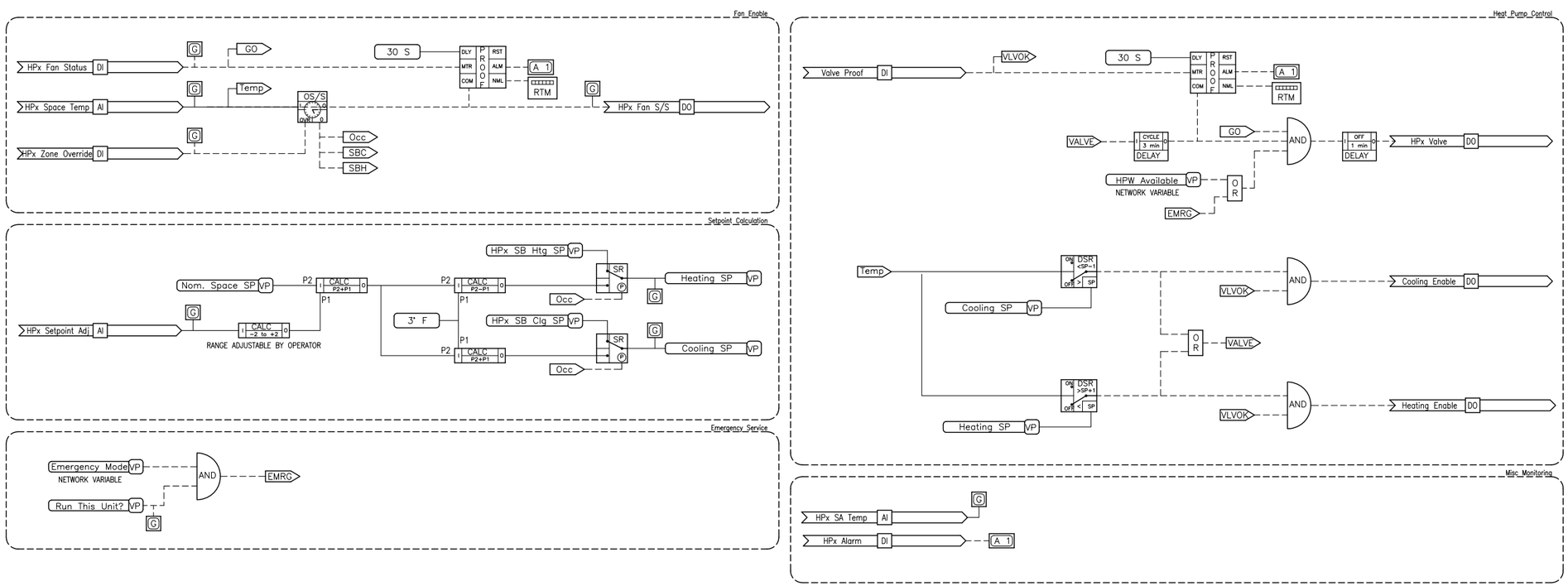

Software Logic Diagram

POINTS LIST

POINT DESCRIPTOR	POINT TYPE DI	AI	DO	AO	COMMENTS
HP-X FAN START/STOP			•		
HP-X FAN STATUS	•				
HP-X ZONE TEMPERATURE		•			ALARM 3°F ABOVE & BELOW SETPOINT; CRITCAL ALARM < 50°F;
HP-X ZONE SETPOINT ADJUST		•			
HP-X ZONE OVERRIDE	•				
HP-X COOLING ENABLE			•		
HP-X HEATING ENABLE			•		
HP-X SUPPLY AIR TEMPERATURE		•			
HP-X ALARM	•				
HP-X HPW VALVE			•		
HP-X VALVE PROOF	•				

REVISIONS

NO.	DESCRIPTION	DATE

Facility Dynamics ENGINEERING
6180 Alexander Bell Drive Suite 220
Columbia, MD 21046: (410) 290-0800

SEQUENCE OF OPERATION

GENERAL:
1. Heat pump unit shall provide zone temperature control by compressor staging as required.
2. Schedule shall be the same as the associated AHU'S in the building.

HEAT PUMP WATER AVAILABILITY: BAS shall generate a "HPW AVAILABLE" broadcast from the HPW System to all heat pumps when heating or cooling mode is enabled and HPW supply temperature is within setpoint limits. Heat pump heating and cooling operation shall be inhibited unless the "HPW AVAILABLE" point is true or emergency mode is active and unit is selected to run.

EMERGENCY MODE: Emergency mode is activated by the BAS when the HPW System is unable to maintain CW temperature, but can provide CW pumping. BAS operator will select which units are active during this mode and of those also select which will provide sink or source service to the CW.

HPW ISOLATION VALVE: On a call for heating or cooling, and when hpw availability is true, BAS shall command HPW isolation valve open and prove its open status prior to indexing the unit to heating or cooling.

HEAT PUMP: BAS shall control operation of the heat pump as follows:

1. COOLING MODE: Whenever the unit is energized and fan status is proven, BAS shall index the heat pump to cooling mode as required to maintain space temperature cooling setpoint.
2. HEATING MODE: Whenever the unit is energized and fan status is proven, BAS shall index the heat pump to heating mode as required to maintain space temperature heating setpoint.
3. SAFETIES: Heat pump unit shall start, stop, and protect the compressors via unit mounted controls. refer to the specification on the respective unit for the unit mounted controls and safeties. BAS enable/disable logic shall include a minimum on/off cycle delay of 3 minutes (adj.).
4. HEAT PUMP ALARM: BAS shall monitor the status of the heat pump alarm contact, and shall generate an alarm at the operator's workstation.

SPACE TEMPERATURE CONTROL: Three setpoints shall apply. Normal (72°F adj.)), setback heating (65°F (adj.)), and setback cooling (80°F). These three values shall be the only values changed by the operator to adjust space temperatures. All other deadbands, differentials, etc. shall be calculated in the program logic (unless another means is provided to prohibit overlap of the heating and cooling loops and ensure a dead band such as function block templates that restrict the setpoint input). During the normal periods, separate heating and cooling setpoints shall be calculated.
1. Normal space cooling setpoint: shall be the normal space temperature plus 2°F (adj.)
2. Normal space heating setpoint: shall be the normal space temperature minus 2°F (adj.)

State of Delaware

Standard Control Drawings

Eng	HJN
Drawn	HJN
Chkd	---
Appd	---
Issued	05/14/2008
Job No.	----
Scale	N/A
Proj Code	

DESIGN REVIEW

WATER SOURCE HEAT PUMP

00 OF 00
SHEET NUMBER

C-2.04
DWG NUMBER

© 2008 FACILITY DYNAMICS ENGINEERING

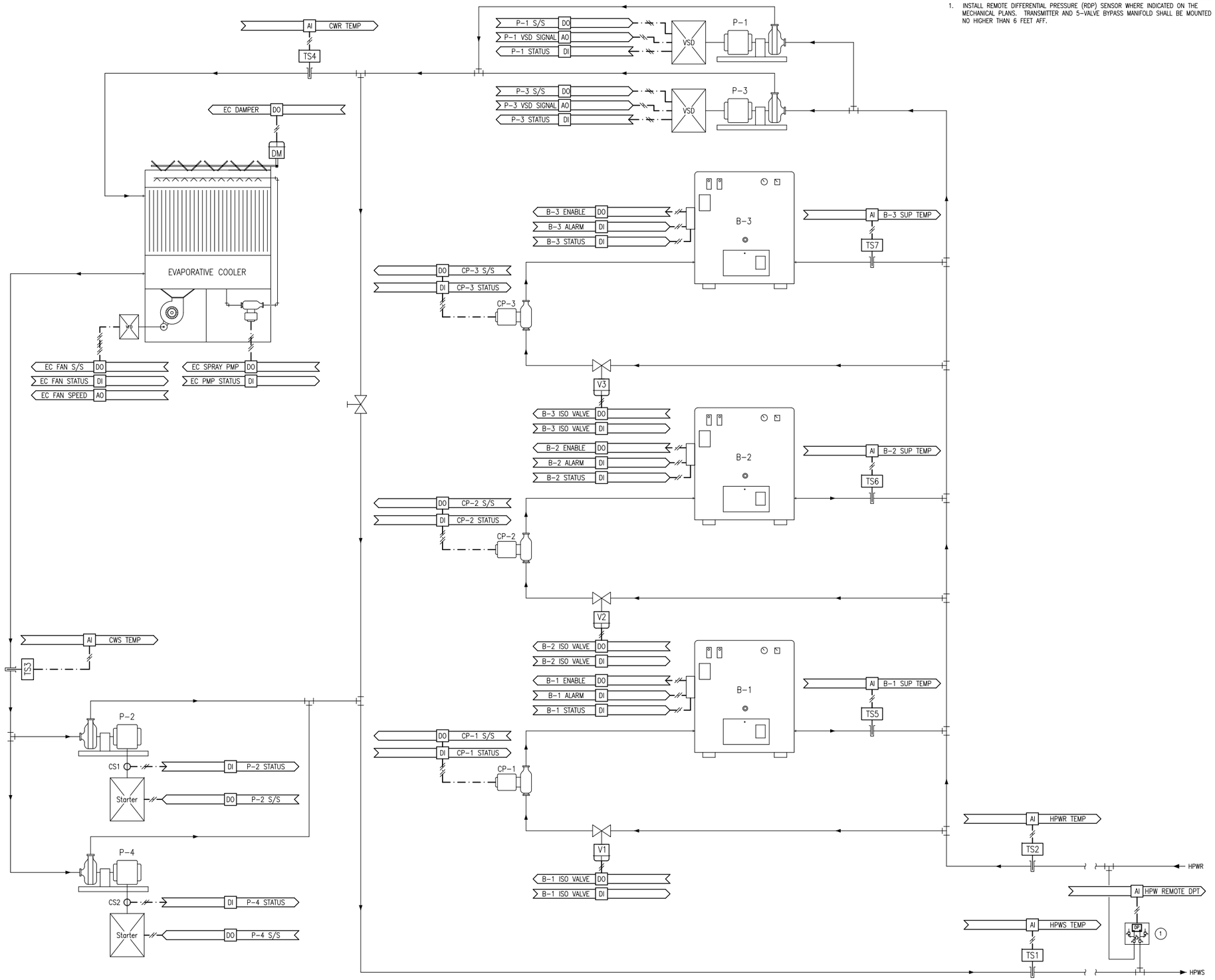

NOTES

1. INSTALL REMOTE DIFFERENTIAL PRESSURE (RDP) SENSOR WHERE INDICATED ON THE MECHANICAL PLANS. TRANSMITTER AND 5-VALVE BYPASS MANIFOLD SHALL BE MOUNTED NO HIGHER THAN 6 FEET AFF.

POINTS LIST

POINT DESCRIPTOR	POINT TYPE DI	AI	DO	AO	COMMENTS
HPW SUPPLY TEMPERATURE		•			ALARM 5°F ABOVE OR BELOW SETPOINT
HPW RETURN TEMPERATURE		•			
B-X SUPPLY TEMPERATURE		•			TYPICAL FOR 3
HPW REMOTE DPT		•			
CW SUPPLY TEMPERATURE		•			ALARM 3°F ABOVE SETPOINT
CW RETURN TEMPERATURE		•			
EVAP COOLER DAMPER			•		
EVAP COOLER FAN SPEED				•	
EVAP COOLER FAN STATUS	•				PROOF ALARM
EVAP COOLER FAN S/S			•		
EVAP COOLER SPRAY PMP STATUS	•				
EVAP COOLER SPRAY PMP S/S			•		
P-X START/STOP			•		TYPICAL FOR 4
P-X STATUS	•				TYPICAL FOR 4; PROOF ALARM
P-X VSD SIGNAL				•	TYPICAL FOR 2
BOILER-X ISOLATION VALVE			•		TYPICAL FOR 3
BOILER-X ISOLATION VALVE STATUS	•				TYPICAL FOR 3
BOILER-X ENABLE			•		TYPICAL FOR 3
BOILER-X ALARM	•				TYPICAL FOR 3; CRITICAL ALARM
BOILER-X STATUS	•				TYPICAL FOR 3
CP-X START/STOP			•		TYPICAL FOR 3
CP-X STATUS	•				TYPICAL FOR 3; PROOF ALARM

REVISIONS

NO.	DESCRIPTION	DATE

Facility Dynamics ENGINEERING
6780 Alexander Bell Drive Suite 220
Columbia, MD 21046 (410) 290-0800

State of Delaware

Standard Control Drawings

Eng	HJN
Drawn	HJN
Chkd	---
Appd	---
Issued	1/26/2009
Job No.	----
Scale	N/A
Proj Code	

DESIGN REVIEW

WATER SOURCE HEAT PUMP SYSTEM

00 OF 00
SHEET NUMBER

C-3.00
DWG NUMBER

© 2009 FACILITY DYNAMICS ENGINEERING

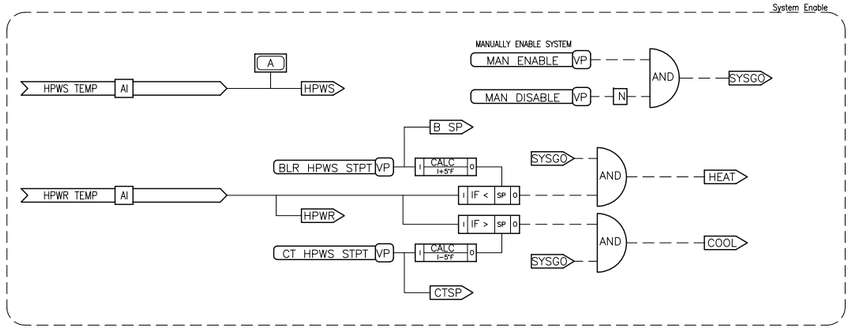

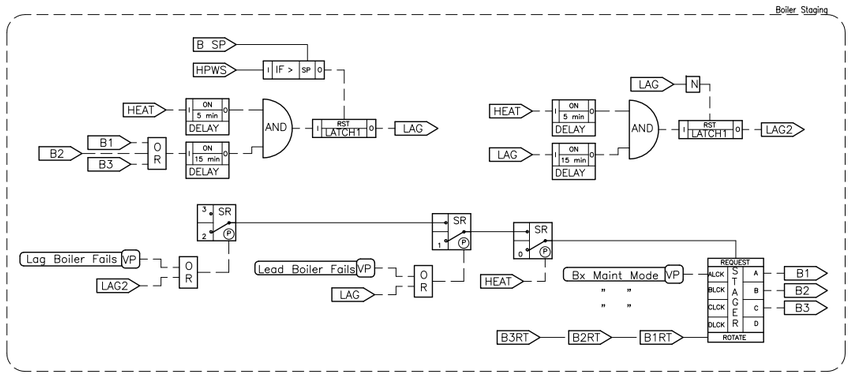

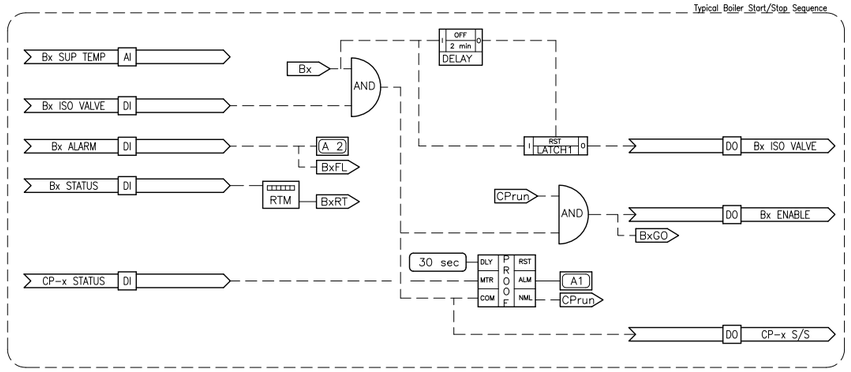

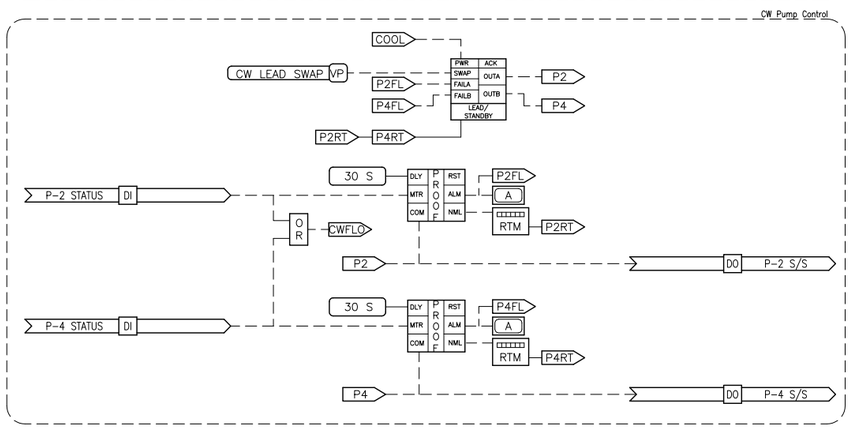

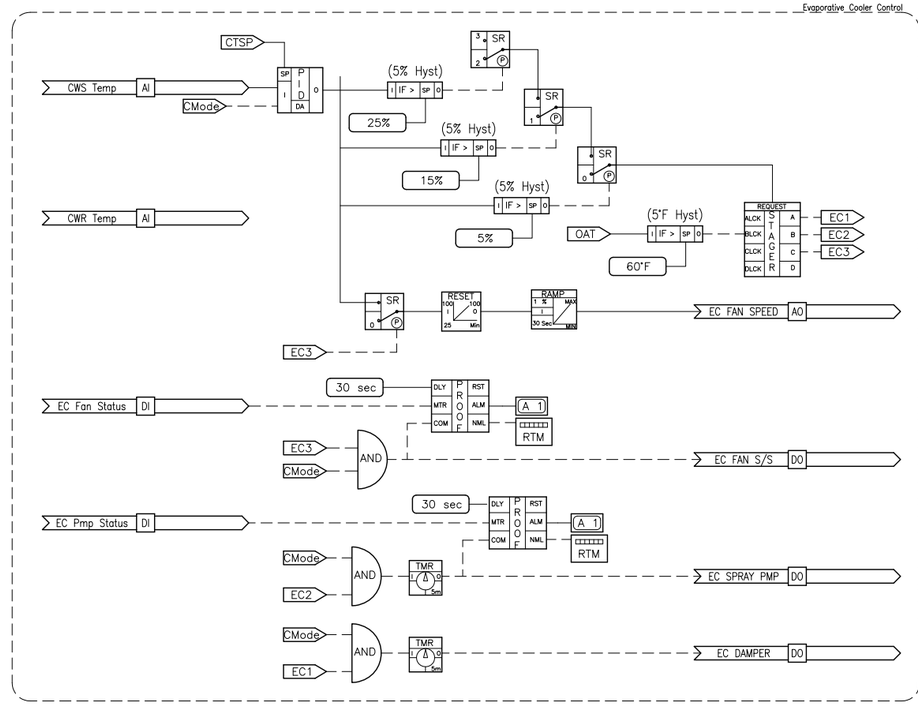

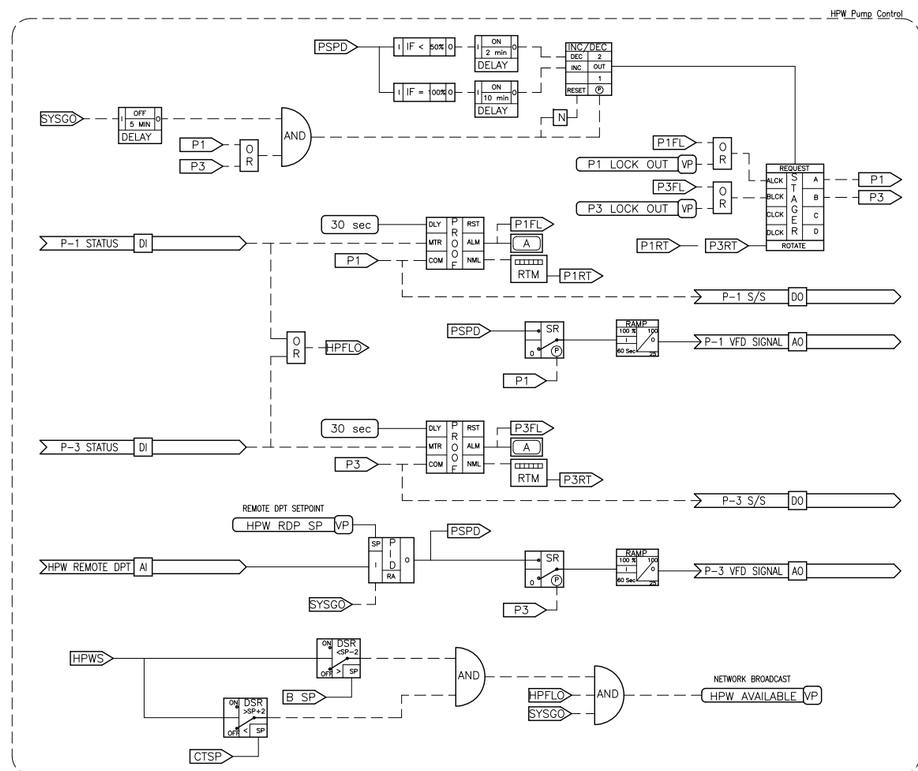

SEQUENCE OF OPERATION

GENERAL:
1. THE VARIABLE VOLUME SYSTEM IS DESIGNED TO PROVIDE CONDENSER WATER TO HVAC EQUIPMENT WITH WATER SOURCE COMPRESSORS.
2. WATER TEMPERATURE SHALL BE MAINTAINED BY THE BOILERS AND EVAPORATIVE COOLER.
3. PROVIDE ANY FIELD INTERLOCK WIRING REQUIRED FOR THE BOILERS.
4. REFER TO SECTION 15958 FOR CENTRAL PLANT EQUIPMENT MONITORING AND MANAGEMENT REQUIREMENTS.

SYSTEM ENABLE: SYSTEM SHALL BE MANUALLY ENABLED BY THE OPERATOR AND RUN CONTINOUSLY.

COOLING/HEATING MODES: COOLING MODE AND HEATING MODE SHALL BE DETERMINED BY THE BAS BASED ON HPW TEMPERATURE AS FOLLOWS (ALL VALUES SHALL BE ADJUSTABLE):

1. HEATING SHALL BE ENABLED WHENEVER HPWR TEMPERATURE FALLS TO WITHIN 5°F (WITH A 2°F CYCLE DIFFERENTIAL) OF THE BOILER HPWS SETPOINT (60°F).
2. COOLING SHALL BE ENABLED WHENEVER HPWR TEMPERATURE RISES TO WITHIN 5°F (WITH A 2°F CYCLE DIFFERENTIAL) OF THE EVAPORATIVE COOLER HPWS SETPOINT (85°F).

HPW PUMP CONTROL (P-1,3): BAS SHALL CONTROL THE PUMPS AS FOLLOWS:

1. START/STOP: LEAD PUMP SHALL RUN CONTINUOUSLY. LEAD PUMP DESIGNATION SHALL BE ROTATED BY THE BAS ON A WEEKLY BASIS.
2. PROOF: BAS SHALL PROVE PUMP OPERATION AND USE THE STATUS INDICATION TO ACCUMULATE RUNTIME. UPON FAILURE OF THE LEAD PUMP, BAS SHALL ENUNCIATE AN ALARM AND ENABLE THE STANDBY PUMP.
3. VSD CONTROL: BAS SHALL CONTROL THE OUTPUT OF THE ACTIVE PUMP VSD PER A RA PID LOOP TO MAINTAIN THE HPW REMOTE DIFFERENTIAL PRESSURE (RDP) SENSOR AT SETPOINT (DETERMINED BY TAB). ON START AND STOP, THE VSD SHALL RAMP TO SPEED AND SLOW DOWN WITHIN ADJUSTABLE ACCELERATION AND DECELERATION LIMITS.

BOILER CIRCULATING PUMP CONTROL: BAS SHALL CONTROL THE PUMP AS FOLLOWS:

1. START/STOP: WHEN HEATING IS ENABLED, AS DEFINED ABOVE, AND THE BOILER ISOLATION VALVE HAS PROVEN OPEN (SEE NOTE 2), BAS SHALL START THE ASSOCIATED CIRCULATING PUMP.
2. PROOF: BAS SHALL PROVE PUMP OPERATION AND USE THE STATUS INDICATION TO ACCUMULATE RUNTIME. UPON FAILURE OF THE PUMP, BAS SHALL ENUNCIATE AN ALARM AND FAIL THE ASSOCIATED BOILER.

BOILER STAGING:
1. BAS SHALL CONTROL THE STARTING AND STOPPING OF BOILERS TO MEET THE DEMANDS OF THE HEATING WATER SYSTEM. WHILE HEATING IS ENABLED, A MINIMUM OF ONE BOILER SHALL BE ENABLED. IF NONE ARE RUNNING AT THE START OF THE MODE, A BOILER SHALL BE STARTED PER THE BOILER START SEQUENCE SPECIFIED BELOW.
2. ONCE THE CONDITIONS MERIT STARTING OR STOPPING A BOILER, BAS SHALL COMPLETE THE STARTING OR STOPPING SEQUENCE REGARDLESS OF TEMPERATURE FLUCTUATIONS DURING THE SEQUENCE.
   A. AN ADDITIONAL BOILER SHALL BE REQUESTED AND STARTED PER THE BOILER START SEQUENCE SPECIFIED BELOW WHEN:
      1) HPWS TEMPERATURE FALLS MORE THAN 5°F BELOW THE BOILER HPWS SETPOINT FOR 5 MIN. (ADJ.) CONTINUOUSLY
      2) AND WHEN MORE THAN 15 MIN. (ADJ.) HAS ELAPSED SINCE THE START OF THE LAST BOILER
3. BOILERS SHALL BE STOPPED, PER THE BOILER STOP SEQUENCE SPECIFIED BELOW, BASED ON HPWS TEMPERATURE AS FOLLOWS:
   A. ONE BOILER SHALL BE STOPPED WHEN THE HPWS TEMPERATURE RISES 10°F (ADJ.) ABOVE SETPOINT
   B. AND WHEN A MINIMUM OF 15 MIN. HAS ELAPSED SINCE A BOILER HAS BEEN STARTED.

BOILER PRIORITY SELECTION: BAS SHALL AUTOMATICALLY PRIORITIZE THE BOILERS FOR STARTING ORDER BASED ON THEIR RESPECTIVE ACCUMULATED ENABLE TIME. THE FOLLOWING METHOD SHALL BE EMPLOYED TO ROTATE AND REPRIORITIZE THE BOILERS:
1. THE BOILER WITH THE LEAST RUN TIME SHALL BE STARTED FIRST AND THE BOILER WITH THE GREATEST RUN TIME SHALL BE STOPPED FIRST.

BOILER START SEQUENCE:
1. ON A REQUEST FOR A BOILER TO START, THE BAS SHALL EXECUTE THE FOLLOWING SEQUENCE:
   A. COMMAND THE ISOLATION VALVE (SEE NOTE 2) ASSOCIATED WITH THE BOILER AND PROVE IT IS IN THE OPEN POSITION.
   B. ENERGIZE AND PROVE OPERATION OF THE ASSOCIATED CIRCULATING PUMP.
   C. ENABLE THE BOILER TO START UNDER ITS OWN CONTROLS.

MAINTENANCE MODE: OPERATORS SHALL BE ABLE TO LOCK OUT BOILERS IN MAINTENANCE MODE. THIS MEANS THAT THE REQUESTS FOR THIS BOILER AND ASSOCIATED APPURTENANCES SHALL BE BYPASSED. THIS SHALL BE DONE THROUGH A GRAPHIC ICON ASSOCIATED WITH A VIRTUAL POINT INDICATING WHETHER THE MAINTENANCE MODE IS ACTIVE OR VIA A PROPERTY ASSOCIATED WITH THE BOILER ICON.

EVAPORATIVE COOLER PUMP CONTROL (P-2,4): BAS SHALL CONTROL THE PUMPS AS FOLLOWS:

1. START/STOP: WHEN COOLING IS ENABLED, AS DEFINED ABOVE, BAS SHALL START THE LEAD PUMP. LEAD PUMP DESIGNATION SHALL BE ROTATED BY THE BAS ON A WEEKLY BASIS.
2. PROOF: BAS SHALL PROVE PUMP OPERATION AND USE THE STATUS INDICATION TO ACCUMULATE RUNTIME. UPON FAILURE OF THE LEAD PUMP, BAS SHALL ENUNCIATE AN ALARM AND ENABLE THE STANDBY PUMP.

EVAPORATIVE COOLER CONTROL:
1. WHEN THE SYSTEM IS ENABLED, BAS SHALL CONTROL THE EVAPORATIVE COOLER TO MAINTAIN A MAXIMUM HP WATER SUPPLY TEMPERATURE OF 85°F (ADJ.).
2. DAMPERS: BAS SHALL OPEN THE COOLER DAMPERS AS THE FIRST STAGE OF COOLING DESCRIBED IN 'STAGING' BELOW.
3. SPRAY PUMP: WHENEVER THE OUTSIDE AIR TEMPERATURE IS ABOVE 60°F (ADJ.) THE BAS WILL ENERGIZE THE SPRAY PUMP AS THE SECOND STAGE OF COOLING DESCRIBED IN 'STAGING' BELOW.
4. PUMP PROOF: BAS SHALL PROVE PUMP OPERATION AND USE THE STATUS INDICATION TO ACCUMULATE RUNTIME.
5. VFD FAN: BAS SHALL MODULATE THE COOLER FAN VIA THE STAGING PI LOOP AS THE THIRD STAGE OF COOLING DESCRIBED IN 'STAGIN' BELOW.
6. FAN PROOF: BAS SHALL PROVE FAN OPERATION AND USE THE STATUS INDICATION TO ACCUMULATE RUNTIME
7. STAGING: BAS SHALL STAGE THROUGH THREE COOLING MODES VIA A PI LOOP CALCULATING A COOLING DEMAND VALUE (0-100%) TO MAINTAIN THE MAXIMUM HP WATER SUPPLY TEMPERATURE SETPOINT.
   A. STAGE 1 (PI>5%, HYST 5%) – BAS SHALL OPEN EVAPORATIVE COOLER DAMPERS.
   B. STAGE 2 (PI>15%, HYST 5%) – BAS SHALL ENERGIZE THE SPRAY PUMP, IF AVAILABLE.
   C. STAGE 3 (PI>25%, HYST 10%) – BAS SHALL ENERGIZE AND MODULATE THE COOLER FAN FROM MINIMUM TO MAXIMUM SPEED AS THE PI VALUE RISES FROM 25% TO 100%.

HPW AVAILABILITY: BAS SHALL GENERATE A 'HPW AVAILABLE' BROADCAST TO ALL HEAT PUMPS WHEN SYSTEM IS ENABLED AND HPW SUPPLY TEMPERATURE IS WITHIN SETPOINT LIMITS.

© 2009 FACILITY DYNAMICS ENGINEERING

REVISIONS

NO.	DESCRIPTION	DATE

Facility Dynamics ENGINEERING
6760 Alexander Bell Drive Suite 220
Columbia, MD 21046 (410) 290-0500

State of Delaware

Standard Control Drawings

Eng	HJN
Drawn	HJN
Chkd	---
Appd	---
Issued	1/26/2009
Job No.	----
Scale	N/A
Proj Code	

DESIGN REVIEW

WATER SOURCE HEAT PUMP SYSTEM (CONT'D)

00 OF 00
SHEET NUMBER

C-3.01
DWG NUMBER

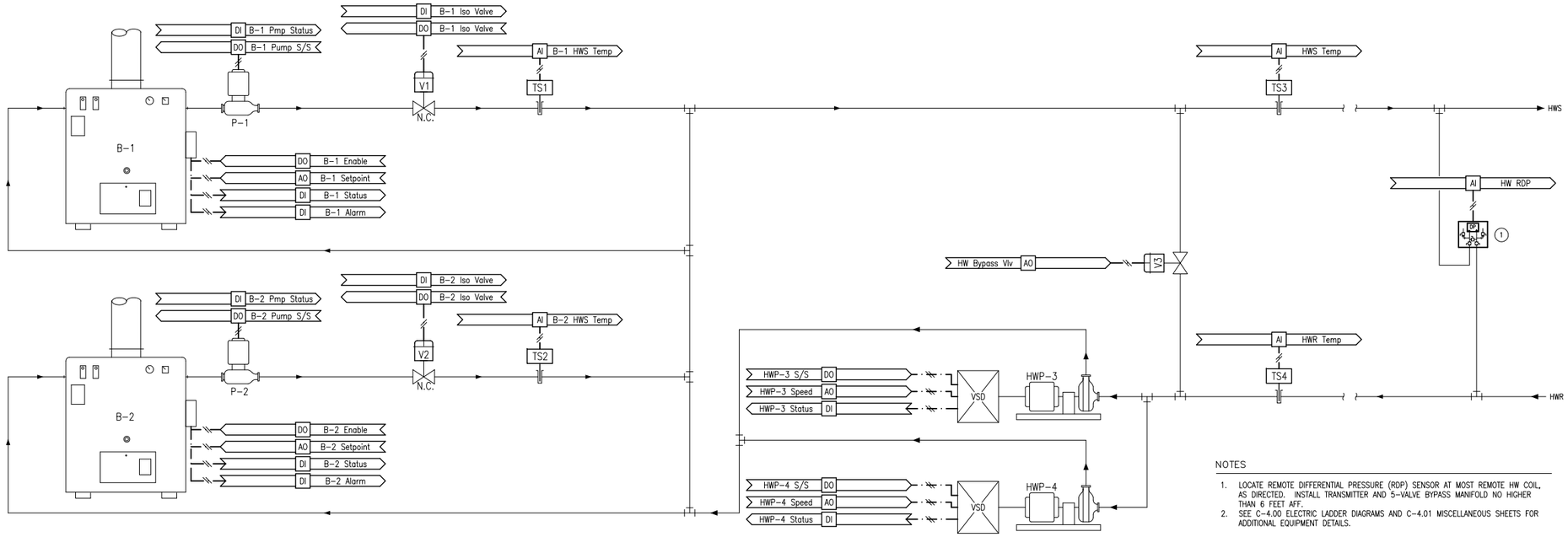

NOTES

1. LOCATE REMOTE DIFFERENTIAL PRESSURE (RDP) SENSOR AT MOST REMOTE HW COIL, AS DIRECTED. INSTALL TRANSMITTER AND 5-VALVE BYPASS MANIFOLD NO HIGHER THAN 6 FEET AFF.
2. SEE C-4.00 ELECTRIC LADDER DIAGRAMS AND C-4.01 MISCELLANEOUS SHEETS FOR ADDITIONAL EQUIPMENT DETAILS.

HOT WATER SYSTEM WITH VV PUMPS

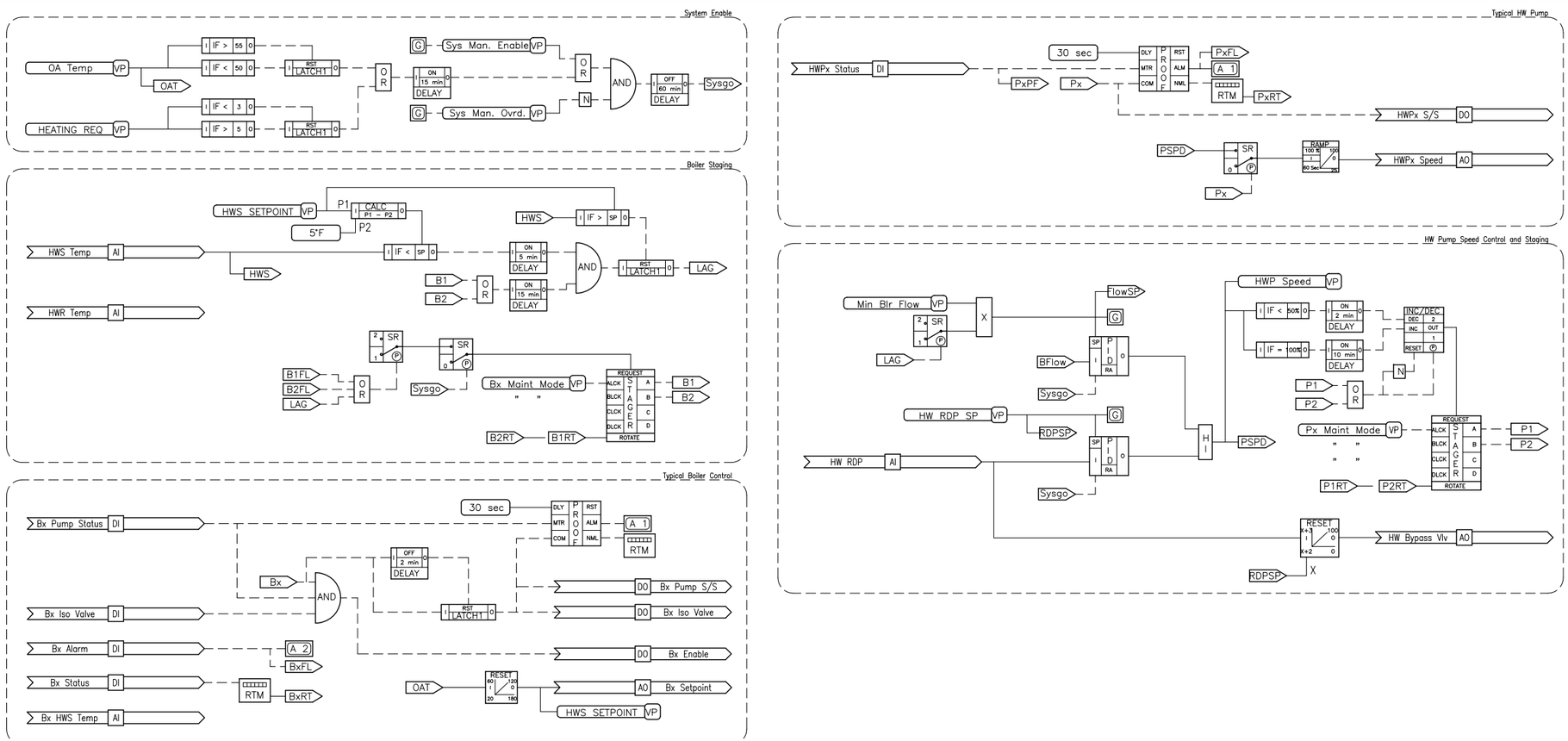

Software Logic Diagram

POINTS LIST

POINT DESCRIPTOR	POINT TYPE DI	AI	DO	AO	COMMENTS
HW SUPPLY TEMPERATURE		•			ALARM 5°F ABOVE OR BELOW SETPOINT
HW RETURN TEMPERATURE		•			
B-X HW SUPPLY TEMPERATURE		•			TYPICAL FOR 2
HW REMOTE DPT		•			
HWP-X START/STOP			•		TYPICAL FOR 2
HWP-X VSD SPEED SIGNAL				•	TYPICAL FOR 2
HWP-X STATUS	•				TYPICAL FOR 2; PROOF ALARM
B-X ENABLE			•		TYPICAL FOR 2
B-X STATUS	•				TYPICAL FOR 2
B-X SETPOINT				•	TYPICAL FOR 2
B-X ALARM	•				TYPICAL FOR 2; CRITICAL ALARM
B-X ISOLATION VALVE OPEN/CLOSE			•		TYPICAL FOR 2
B-X ISOLATION VALVE STATUS	•				TYPICAL FOR 2
B-X PUMP START/STOP			•		TYPICAL FOR 2
B-X PUMP STATUS	•				TYPICAL FOR 2
HW BYPASS VALVE				•	

SEQUENCE OF OPERATION

GENERAL: BAS SHALL FULLY CONTROL THE HEATING WATER SYSTEM AND EQUIPMENT AND PROVIDE MONITORING AND DIAGNOSTIC INFORMATION FOR MANAGEMENT PURPOSES.
HEATING ENABLE: HEATING SHALL BE ENABLED BY THE OPERATOR AT THE OPERATOR INTERFACE VIA A GRAPHIC ICON OR WHEN OUTSIDE AIR TEMPERATURE IS LESS THAN 50°F (ADJ.) WITH A 5°F CYCLE DIFFERENTIAL OR HEATING REQUEST SETPOINT (ADJ.) IS EXCEEDED FOR 15 MINUTES (ADJ.). ONCE ENABLED, HEATING SHALL REMAIN ENABLED FOR AT LEAST ONE HOUR.
SECONDARY HW PUMPS: BAS SHALL CONTROL THE PUMPS AS FOLLOWS:
1. START/STOP: BAS SHALL COMMAND THE OPERATION OF THE LEAD PUMP AND IT SHALL RUN CONTINUOUSLY WHENEVER HEATING IS ENABLED.
2. PROOF: BAS SHALL PROVE PUMP OPERATION AND USE THE STATUS INDICATION TO ACCUMULATE RUNTIME. UPON FAILURE OF THE LEAD PUMP, BAS SHALL ENERGIZE THE LAG PUMP AND ENUNCIATE A LEVEL 1 ALARM.
3. VSD CONTROL: WHENEVER HEATING IS ENABLED, BAS SHALL CONTROL THE OUTPUT OF THE ACTIVE PUMP VSDS TO TO MAINTAIN HW REMOTE DIFFERENTIAL PRESSURE (RDP) SETPOINT (DETERMINED BY TAB; INITIALLY 10 PSID).
ON START AND STOP, THE VSD SHALL RAMP TO SPEED AND SLOW DOWN WITHIN ADJUSTABLE ACCELERATION AND DECELERATION LIMITS.
4. STAGING: WHEN THE PUMP VSD OUTPUT IS 100% FOR 10 MINUTES (ADJ.), BAS SHALL START AN ADDITIONAL PUMP. WHEN THE PUMP VSD OUTPUT IS < 50% FOR 2 MINUTES (ADJ.) AND MORE THAN ONE PUMP IS ENABLED, BAS SHALL STOP THE ACTIVE PUMP WITH THE GREATEST ACCUMULATED RUNTIME.
HW BYPASS VALVE: BAS SHALL MODULATE THE POSITION OF THE VALVE AS REQUIRED TO MAINTAIN HW RDP AT LEAST 2 PSID ABOVE THE HW RDP SETPOINT.
HW TEMPERATURE CONTROL: BAS SHALL RESET THE LEAVING HW TEMPERATURE SUPPLY OF THE ACTIVE BOILERS BASED ON OUTDOOR AIR TEMPERATURE WITH ALL VALUES BEING ADJUSTABLE. THE SETPOINT SHALL BE RESET FROM 120°F AT OR ABOVE 60°F TO 180°F AT OR BELOW 20°F.
BOILER STAGING:
1. BAS SHALL CONTROL THE STARTING AND STOPPING OF BOILERS TO MEET THE DEMANDS OF THE HEATING WATER SYSTEM. WHILE HEATING IS ENABLED, A MINIMUM OF ONE BOILER SHALL BE ENABLED. IF NONE ARE RUNNING AT THE START OF THE MODE, A BOILER SHALL BE STARTED PER THE BOILER START SEQUENCE SPECIFIED BELOW.
2. ONCE THE CONDITIONS MERIT STARTING OR STOPPING A BOILER, BAS SHALL COMPLETE THE STARTING OR STOPPING SEQUENCE REGARDLESS OF TEMPERATURE FLUCTUATIONS DURING THE SEQUENCE.
A. AN ADDITIONAL BOILER SHALL BE REQUESTED AND STARTED PER THE BOILER START SEQUENCE SPECIFIED BELOW WHEN:
1) HWS TEMPERATURE FALLS MORE THAN 5°F BELOW THE HEATING WATER SUPPLY SETPOINT FOR 5 MIN. (ADJ.) CONTINUOUSLY
2) AND WHEN MORE THAN 15 MIN. (ADJ.) HAS ELAPSED SINCE THE START OF THE LAST BOILER
3. BOILERS SHALL BE STOPPED, PER THE BOILER STOP SEQUENCE SPECIFIED BELOW, BASED ON HW SYSTEM LOAD AS FOLLOWS:
A. ONE BOILER SHALL BE STOPPED WHEN THE HWS TEMPERATURE RISES ABOVE SETPOINT.
B. AND WHEN A MINIMUM OF 15 MIN. HAS ELAPSED SINCE A BOILER HAS BEEN STARTED.
BOILER PRIORITY SELECTION: BAS SHALL AUTOMATICALLY PRIORITIZE THE BOILERS FOR STARTING ORDER BASED ON THEIR RESPECTIVE ACCUMULATED ENABLE TIME. THE FOLLOWING METHOD SHALL BE EMPLOYED TO ROTATE AND REPRIORITIZE THE BOILERS:
1. THE BOILER WITH THE LEAST RUN TIME SHALL BE STARTED FIRST AND THE BOILER WITH THE GREATEST RUN TIME SHALL BE STOPPED FIRST.
BOILER START SEQUENCE:
1. ON A REQUEST FOR A BOILER TO START, THE BAS SHALL EXECUTE THE FOLLOWING SEQUENCE:
A. COMMAND THE ISOLATION VALVE AND PRIMARY PUMP ASSOCIATED WITH THE BOILER AND PROVE BOTH (ISOLATION VALVE IN THE OPEN POSITION, PUMP ENERGIZED).
B. ENABLE THE BOILER TO START UNDER ITS OWN CONTROLS.
MAINTENANCE MODE: OPERATORS SHALL BE ABLE TO LOCK OUT BOILERS IN MAINTENANCE MODE. THIS MEANS THAT THE REQUESTS FOR THIS BOILER AND ASSOCIATED APPURTENANCES SHALL BE BYPASSED. THIS SHALL BE DONE THROUGH A GRAPHIC ICON ASSOCIATED WITH A VIRTUAL POINT INDICATING WHETHER THE MAINTENANCE MODE IS ACTIVE OR VIA A PROPERTY ASSOCIATED WITH THE BOILER ICON.

© 2008 FACILITY DYNAMICS ENGINEERING

REVISIONS

NO.	DESCRIPTION	DATE

Facility Dynamics ENGINEERING
6780 Alexander Bell Drive Suite 220
Columbia, MD 21046 (410) 290-0800

State of Delaware
Standard Control Drawings

Eng	HJN
Drawn	HJN
Chkd	---
Appd	---
Issued	06/11/2008
Job No.	-----
Scale	N/A
Proj Code	

DESIGN REVIEW

HOT WATER SYSTEM WITH VV PUMPS

00 OF 00
SHEET NUMBER

C-3.02
DWG NUMBER

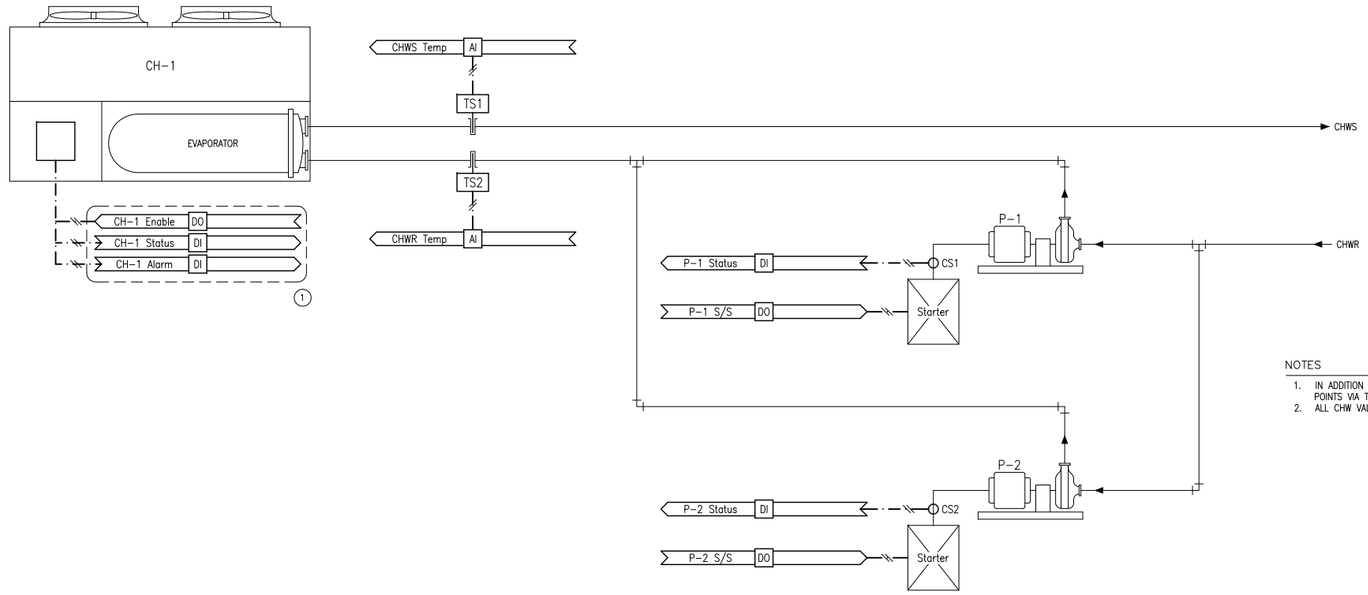

NOTES

1. IN ADDITION TO THE SPECIFIC POINTS SHOWN, BAS SHALL MONITOR ALL AVAILABLE POINTS VIA THE CHILLER INTERFACE DEVICE (CID).
2. ALL CHW VALVES WILL BE 3-WAY.

CHILLED WATER SYSTEM, AIR COOLED

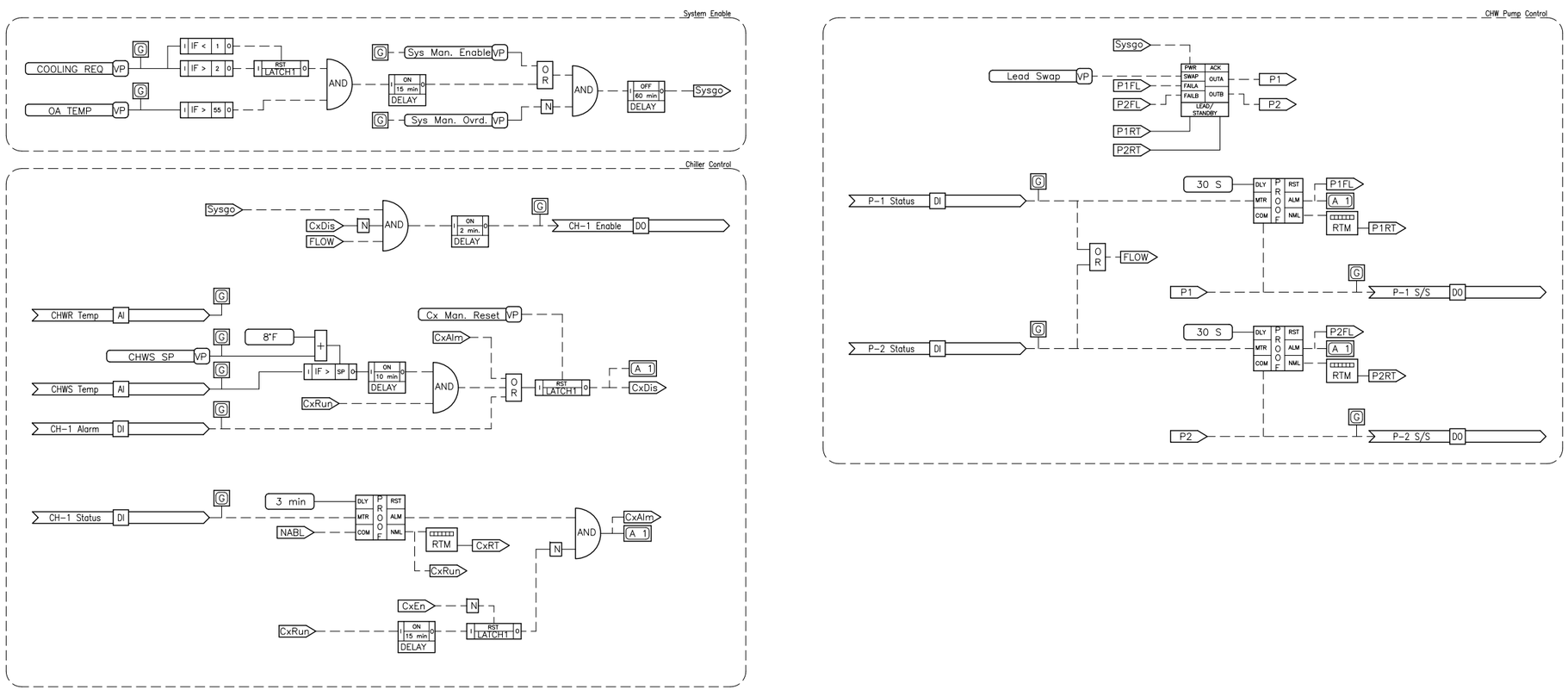

Software Logic Diagram

POINTS LIST

POINT DESCRIPTOR	POINT TYPE DI	AI	DO	AO	COMMENTS
CHW SUPPLY TEMPERATURE		•			ALARM 5°F ABOVE OR BELOW SETPOINT
CHW RETURN TEMPERATURE		•			
P-X START/STOP			•		TYPICAL FOR 2
P-X STATUS	•				TYPICAL FOR 2; PROOF ALARM
CHILLER ENABLE			•		
CHILLER STATUS	•				
CHILLER ALARM	•				CRITICAL ALARM

SEQUENCE OF OPERATION

GENERAL: BAS SHALL FULLY CONTROL THE CHILLED WATER SYSTEM AND EQUIPMENT AND PROVIDE MONITORING AND DIAGNOSTIC INFORMATION FOR MANAGEMENT PURPOSES.

COOLING ENABLE: BAS SHALL ENABLE COOLING WHENEVER COOLING REQUESTS EXCEED SETPOINT (ADJ.) FOR 15 MINUTES (ADJ.) AND OUTSIDE AIR TEMPERATURE EXCEEDS 55°F (ADJ.) OR WHENEVER MANUALLY ENABLED BY THE OPERATOR AT THE OPERATOR INTERFACE VIA A GRAPHIC ICON INTERFACE. ONCE ENABLED SYSTEM SHALL RUN FOR A MINIMUM OF ONE HOUR (ADJ.).

PROOF OF CHILLER OPERATION: BAS SHALL PROVE THE OPERATION OF THE CHILLER VIA CHILLER STATUS AND ALARM POINTS. THE FOLLOWING CONDITIONS SHALL RESULT IN THE ASSESSMENT THAT THE CHILLER HAS FAILED:
1. LOSS OF CHILLER STATUS FOR MORE THAN 15 MINUTES (ADJ.) FROM THE TIME THE CHILLER IS INITIALLY REQUESTED TO START.
2. CHILLER ALARM INPUT
3. LEAVING CHILLED WATER TEMPERATURE EXCEEDS CHILLER SETPOINT PLUS 8°F FOR 10 MIN. CONTINUOUSLY
4. LOSS OF STATUS OF BOTH CHW PUMPS (PUMP PROOF DEBOUNCE TIME SHALL NOT APPLY).

CHILLER REQUEST: A CHILLER REQUEST IS THE REQUEST FOR A CHILLER AND THE ASSOCIATED EQUIPMENT. A CHILLER REQUEST IS ISSUED BEFORE THE ACTUAL RUN COMMAND TO THE CHILLER, WHICH IS THE CLOSURE OF THE PHYSICAL POINT THAT ENABLES THE CHILLER.

PRIMARY CHW PUMP CONTROL: PUMP SHALL BE STARTED WHEN IT IS REQUESTED TO RUN PER THE CHILLER START AND STOP SEQUENCES SPECIFIED BELOW. PUMP SHALL RUN CONTINUOUSLY WHEN THE CHILLER IS REQUESTED. BAS SHALL PROVE OPERATION OF THE PUMP. UPON FAILURE OF THE PRIMARY PUMP THE STANDBY PUMP SHALL BE ENERGIZED. THE OPERATOR SHALL PERFORM LEAD PUMP ROTATION MANUALLY. THE CURRENT LEAD PUMP SHALL REMAIN OPERATIONAL FOR AN ADJUSTABLE TIME PERIOD AFTER THE NEW LEAD PUMP STATUS IS PROVEN.

CHILLER START SEQUENCE: CHILLER SHALL BE REQUESTED TO START WHENEVER COOLING IS ENABLED. ONCE REQUESTED THE FOLLOWING SEQUENCE SHALL OCCUR:
1. WAIT ONE MINUTE (ADJ.).
2. BAS SHALL START THE APPLICABLE CHILLED WATER PUMP AND PROVE OPERATION.
3. WAIT A MAXIMUM OF 5 MINUTES (ADJ.) AFTER THE COMMAND TO START THE CHILLED WATER PUMP FOR THE CHILLER ENVIRONMENT AS SPECIFIED ABOVE TO BE ACCEPTABLE. AS SOON AS THE ENVIRONMENT IS ASSESSED AS ACCEPTABLE, CONTINUE THE START SEQUENCE. IF AFTER 5 MINUTES (ADJ.) THE ENVIRONMENT IS NOT ACCEPTABLE, FAIL THE CHILLER.
4. COMMAND THE CHILLER TO START UNDER ITS OWN CONTROL.
5. MONITOR CHILLER STATUS AND PROVE OPERATION. IF STATUS IS NOT INDICATED WITHIN 3 MINUTES (ADJ.) OF A COMMAND TO START, ENUNCIATE AN ALARM.

CHILLER STOP SEQUENCE: CHILLER REQUEST SHALL BE REMOVED WHENEVER COOLING IS DISABLED. ONCE REQUESTED TO STOP, THE FOLLOWING SEQUENCE SHALL OCCUR:
1. REMOVE CHILLER RUN COMMAND.
2. WAIT FOR STATUS TO CLEAR AND FOR THE CHILLER TO STOP UNDER CONTROL.

© 2008 FACILITY DYNAMICS ENGINEERING

REVISIONS

NO.	DESCRIPTION	DATE

Facility Dynamics ENGINEERING
6780 Alexander Bell Drive, Suite 220
Columbia, MD 21046 (410) 290-0800

State of Delaware

Standard Control Drawings

Eng	HJN
Drawn	HJN
Chkd	---
Appd	---
Issued	06/11/2008
Job No.	----
Scale	N/A
Proj Code	

DESIGN REVIEW

CHILLED WATER SYSTEM, AIR COOLED

00 OF 00
SHEET NUMBER

C-3.03
DWG NUMBER

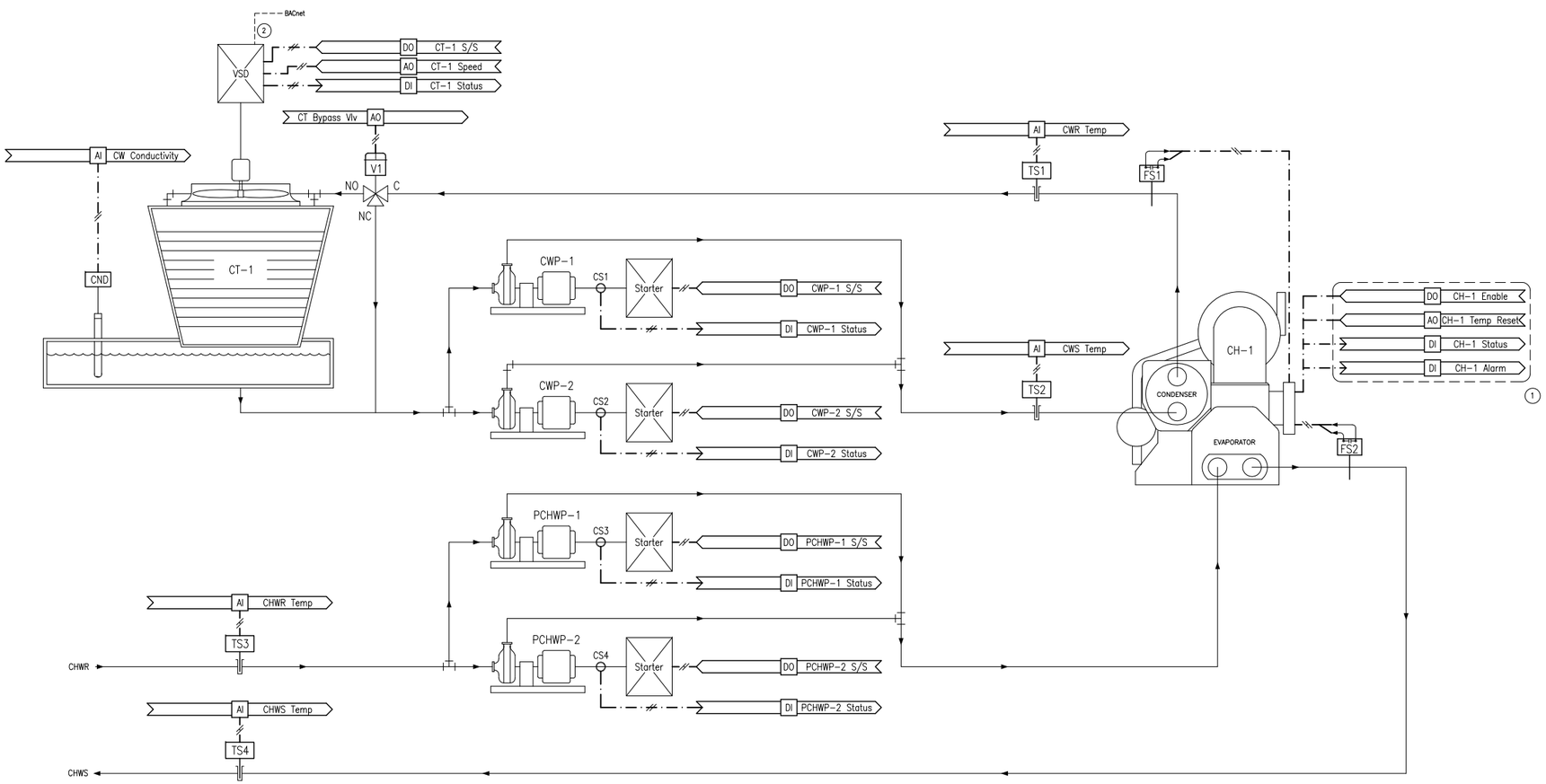

NOTES

1. In addition to the specific points shown, BAS shall monitor all available points via the Chiller Interface Device (CID).
2. Provide communications interface to the control system for diagnostic point information. Refer to points list for required points to be mapped.
3. All CHW valves will be 3-way.

POINTS LIST

POINT DESCRIPTOR	POINT TYPE DI	AI	DO	AO	COMMENTS
CHW SUPPLY TEMPERATURE		•			ALARM 5°F ABOVE OR BELOW SETPOINT
CHW RETURN TEMPERATURE		•			
PCHWP-X START/STOP			•		TYPICAL FOR 2
PCHWP-X STATUS	•				TYPICAL FOR 2; PROOF ALARM
CHILLER ENABLE			•		
CHILLER STATUS	•				
CHILLER ALARM	•				CRITICAL ALARM
CHILLER TEMPERATURE RESET				•	
COOLING TOWER START/STOP			•		
COOLING TOWER STATUS	•				PROOF ALARM
COOLING TOWER SPEED				•	
COOLING TOWER BYPASS VALVE				•	
CWP-X START/STOP			•		TYPICAL FOR 2
CWP-X STATUS	•				TYPICAL FOR 2; PROOF ALARM
CW SUPPLY TEMPERATURE		•			ALARM 5°F ABOVE OR BELOW SETPOINT
CW RETURN TEMPERATURE		•			
CW SUMP CONDUCTIVITY		•			

REVISIONS

NO.	DESCRIPTION	DATE

Facility Dynamics ENGINEERING
6780 Alexander Bell Drive Suite 220
Columbia, MD 21046 (410) 290-0800

State of Delaware

Standard Control Drawings

Eng	HJN
Drawn	HJN
Chkd	---
Appd	---
Issued	1/26/2009
Job No.	----
Scale	N/A
Proj Code	

DESIGN REVIEW

CHILLED WATER SYSTEM, CONDENSER WATER

00 OF 00
SHEET NUMBER

C-3.04
DWG NUMBER

CHILLED WATER SYSTEM, CONDENSER WATER

© 2008 FACILITY DYNAMICS ENGINEERING

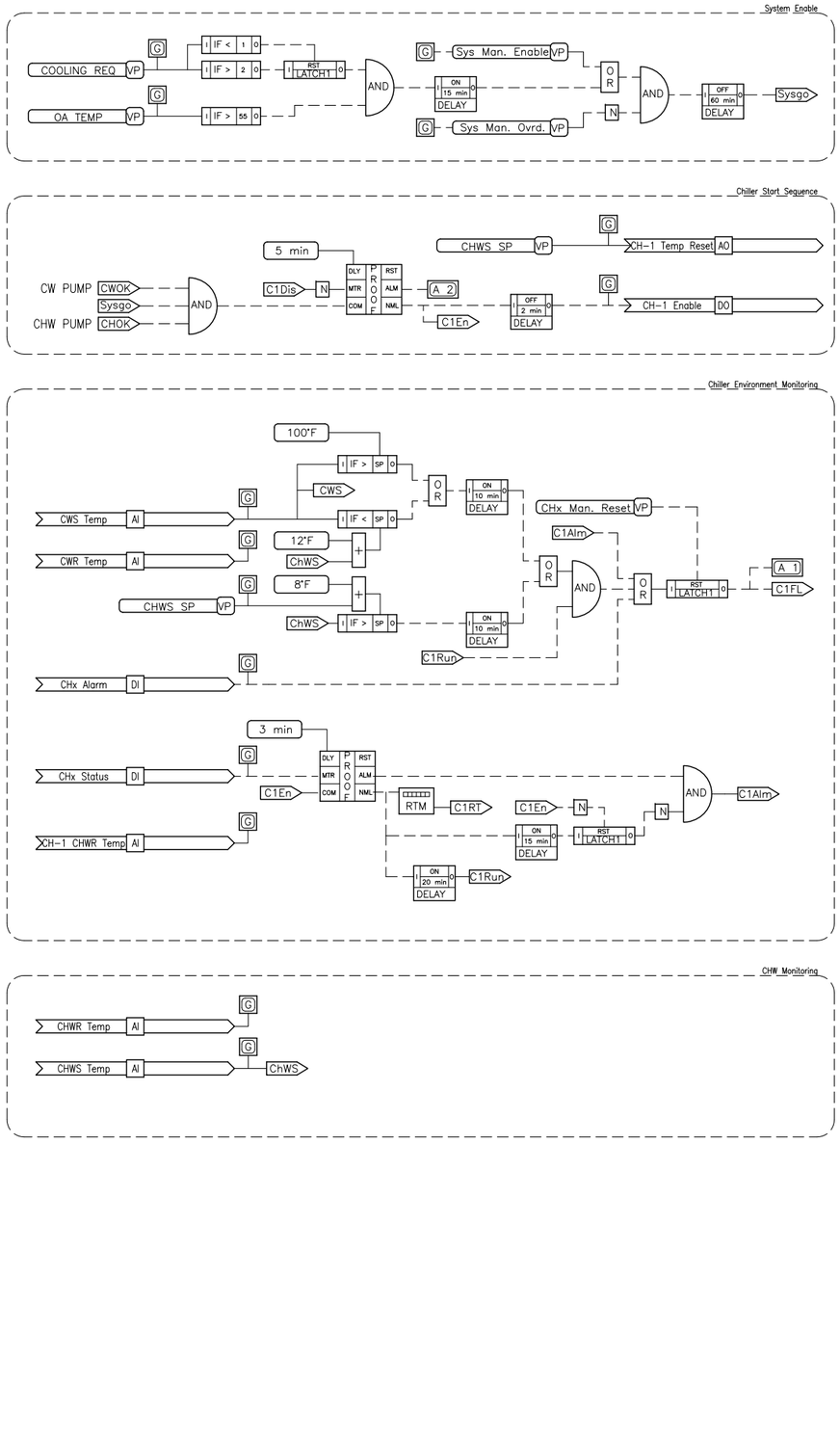

SEQUENCE OF OPERATION

GENERAL: BAS SHALL CONTROL THE CHILLED WATER SYSTEM AND EQUIPMENT AND PROVIDE MONITORING AND DIAGNOSTIC INFORMATION FOR MANAGEMENT PURPOSES.

COOLING ENABLE: COOLING SHALL BE ENABLED WHENEVER MANUALLY ENABLED BY THE OPERATOR AT THE OPERATOR INTERFACE VIA A GRAPHIC ICON OR WHEN OUTSIDE AIR TEMPERATURE IS ABOVE 55°F, WITH A 5°F CYCLE DIFFERENTIAL AND COOLING REQUESTS EXCEED SETPOINT (ADJ.) FOR 15 MINUTES (ADJ.). ONCE ENABLED, COOLING SHALL REMAIN ENABLE FOR AT LEAST ONE HOUR.

PROOF OF CHILLER OPERATION: BAS SHALL PROVE THE OPERATION OF THE CHILLER VIA CHILLER STATUS AND ALARM POINTS. WHEN A CHILLER IS ASSESSED AS FAILED, A LEVEL 1 ALARM SHALL BE ENUNCIATED. THE FOLLOWING CONDITIONS SHALL RESULT IN THE ASSESSMENT THAT THE CHILLER HAS FAILED:
1. LOSS OF CHILLER STATUS FOR MORE THAN 15 MIN (ADJ.) AFTER IT IS INITIALLY REQUESTED.
2. CLOSURE OF CHILLER FAILURE INPUT.
3. LEAVING CHILLED WATER TEMPERATURE EXCEEDS SETPOINT PLUS 8°F FOR 10 MINUTES CONTINUOUSLY AND A MINIMUM OF 20 MINUTES HAS ELAPSED SINCE THE CHILLER HAS BEEN STARTED.
4. CHILLER ENVIRONMENT IS UNACCEPTABLE FOR 10 MIN. AS SPECIFIED BELOW.

CHILLER ENVIRONMENT MONITORING: BAS SHALL MONITOR THE ENVIRONMENT OF THE CHILLER AND REMOVE THE RUN COMMAND WHEN THE ENVIRONMENT IS ASSESSED AS UNACCEPTABLE. AN UNACCEPTABLE ENVIRONMENT WILL INCLUDE ANY OF THE FOLLOWING:
A) LOSS OF STATUS ON THE CHW OR CW PUMPS (PUMP PROOF DEBOUNCE TIME SHALL NOT APPLY)
B) CONDENSER WATER ENTERING TEMPERATURE FALLS BELOW CHW SUPPLY TEMPERATURE SETPOINT PLUS 12°F OR RISES ABOVE 100°F (ALL VALUES ADJ.).
C) IN THE EVENT THAT THE ENVIRONMENT IS ASSESSED AS UNACCEPTABLE, BAS SHALL ENUNCIATE A LEVEL 2 ALARM, REMOVE CHILLER RUN COMMAND (NOT THE CHILLER REQUEST; ALL SUPPORTING EQUIPMENT SHALL CONTINUE TO OPERATE) AND START A TIMER. IF THE ENVIRONMENT IS STILL UNACCEPTABLE AFTER 10 MIN. (ADJ.), FAIL THE CHILLER.

CHILLED WATER TEMPERATURE CONTROL: THE CHILLED WATER TEMPERATURE SETPOINT SHALL BE MANUALLY SET BY THE OPERATOR.

PRIMARY CHW PUMP CONTROL: BAS SHALL CONTROL THE PUMPS AS FOLLOWS:
1. START/STOP: LEAD PUMP SHALL BE STARTED WHEN THE CHILLER IS REQUESTED TO RUN, PER THE CHILLER START AND STOP SEQUENCES SPECIFIED BELOW AND SHALL RUN CONTINUOUSLY.
2. PROOF: BAS SHALL PROVE PUMP OPERATION AND USE THE STATUS INDICATION TO ACCUMULATE RUNTIME. UPON FAILURE OF THE LEAD PUMP, BAS SHALL ENERGIZE THE STANDBY PUMP AND ENUNCIATE A LEVEL 1 ALARM.

CONDENSER WATER PUMP CONTROL: BAS SHALL CONTROL THE PUMPS AS FOLLOWS:
1. START/STOP: LEAD PUMP SHALL BE STARTED WHEN THE CHILLER IS REQUESTED TO RUN, PER THE CHILLER START AND STOP SEQUENCES SPECIFIED BELOW AND SHALL RUN CONTINUOUSLY.
2. PROOF: BAS SHALL PROVE PUMP OPERATION AND USE THE STATUS INDICATION TO ACCUMULATE RUNTIME. UPON FAILURE OF THE LEAD PUMP, BAS SHALL ENERGIZE THE STANDBY PUMP AND ENUNCIATE A LEVEL 1 ALARM.

CHILLER START SEQUENCE: ON A REQUEST FOR A CHILLER TO START, THE FOLLOWING SEQUENCE SHALL OCCUR:
1. VERIFY CHW AND CW PUMPS ARE OPERATING.
2. COMMAND THE CHILLER TO START UNDER ITS OWN CONTROL.
3. MONITOR CHILLER STATUS AND PROVE OPERATION.

CHILLER STOP SEQUENCE: WHEN THE CHILLER IS NO LONGER REQUESTED, REMOVE CHILLER RUN COMMAND.

MAINTENANCE MODE: OPERATORS SHALL BE ABLE TO LOCK OUT CHILLERS AND PUMPS IN MAINTENANCE MODE. THIS MEANS THAT THE REQUESTS FOR THIS EQUIPMENT AND ASSOCIATED APPURTENANCES SHALL BE BYPASSED. THIS SHALL BE DONE THROUGH A GRAPHIC ICON ASSOCIATED WITH A VIRTUAL POINT INDICATING WHETHER THE MAINTENANCE MODE IS ACTIVE OR VIA A PROPERTY ASSOCIATED WITH THE CHILLER ICON.

COOLING TOWER FAN CONTROL: BAS SHALL CONTROL THE TOWER FAN AS FOLLOWS:
1. START/STOP: TOWER FAN SHALL BE STARTED WHEN COOLING IS ENABLED AND CONDENSER WATER PUMP STATUS IS PROVEN.
2. PROOF: BAS SHALL PROVE FAN OPERATION AND USE THE STATUS INDICATION TO ACCUMULATE RUNTIME.
3. VSD CONTROL: WHENEVER THE TOWER IS ENABLED, BAS SHALL CONTROL THE OUTPUT OF THE FAN VSD PER A DA PID LOOP TO MAINTAIN CONDENSER WATER SUPPLY TEMPERATURE SETPOINT OF 75°F (ADJ.). ON START AND STOP, THE VSD SHALL RAMP TO SPEED AND SLOW DOWN WITHIN ADJUSTABLE ACCELERATION AND DECELERATION LIMITS.

COOLING TOWER BYPASS VALVE CONTROL: BAS SHALL MODULATE THE BYPASS VALVE VIA A RA PID LOOP TO MAINTAIN MINIMUM CONDENSER WATER SUPPLY TEMPERATURE SETPOINT OF 65°F (ADJ.).

© 2009 FACILITY DYNAMICS ENGINEERING

REVISIONS

NO.	DESCRIPTION	DATE

Facility Dynamics ENGINEERING
6780 Alexander Bell Drive Suite 220
Columbia, MD 21046 (410) 290-0800

State of Delaware

Standard Control Drawings

Eng	HJN
Drawn	HJN
Chkd	---
Appd	---
Issued	1/26/2009
Job No.	----
Scale	N/A
Proj Code	

DESIGN REVIEW

CHILLED WATER SYSTEM, CONDENSER WATER

00 OF 00
SHEET NUMBER

C-3.05
DWG NUMBER

CHILLED WATER SYSTEM, CONDENSER WATER

Software Logic Diagram

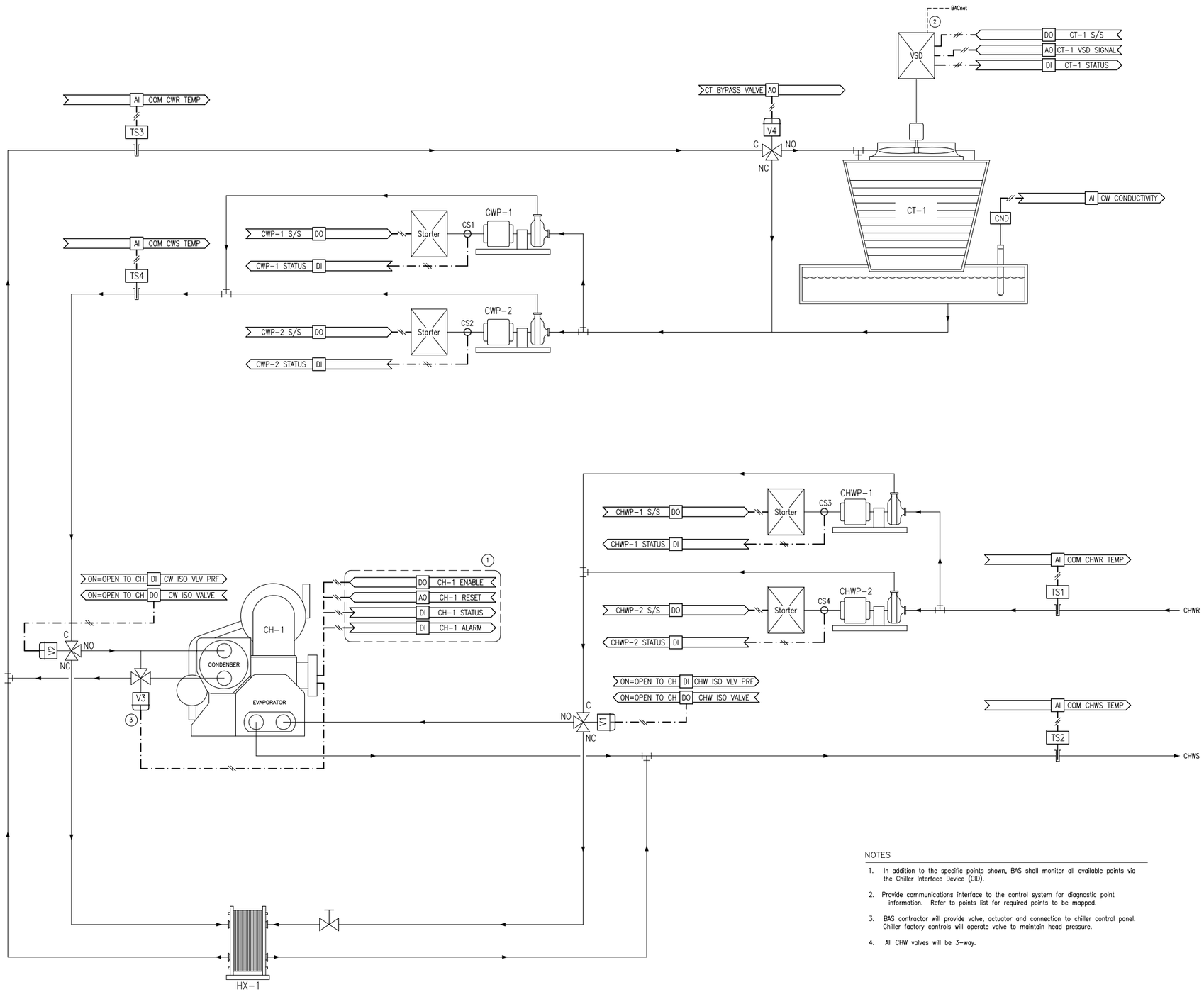

NOTES

1. In addition to the specific points shown, BAS shall monitor all available points via the Chiller Interface Device (CID).
2. Provide communications interface to the control system for diagnostic point information. Refer to points list for required points to be mapped.
3. BAS contractor will provide valve, actuator and connection to chiller control panel. Chiller factory controls will operate valve to maintain head pressure.
4. All CHW valves will be 3-way.

POINTS LIST

POINT DESCRIPTOR	POINT TYPE DI	AI	DO	AO	COMMENTS
COMMON CHWS TEMPERATURE		•			ALARM 3°F ABOVE SETPOINT
COMMON CHWR TEMPERATURE		•			
COMMON CWS TEMPERATURE		•			ALARM 3°F ABOVE SETPOINT
COMMON CWR TEMPERATURE		•			
CW ISOLATION VALVE			•		
CW ISOLATION VALVE PROOF	•				PROOF ALARM
CHW ISOLATION VALVE			•		
CHW ISOLATION VALVE PROOF	•				PROOF ALARM
CH-1 ENABLE			•		
CH-1 RESET				•	
CH-1 STATUS	•				
CH-1 GENERAL ALARM	•				CRITICAL ALARM
CHWP-X START/STOP			•		TYPICAL FOR 2
CHWP-X STATUS	•				TYPICAL FOR 2; PROOF ALARM
CWP-X START/STOP			•		TYPICAL FOR 2
CWP-X STATUS	•				TYPICAL FOR 2; PROOF ALARM
CT-1 START/STOP			•		
CT-1 STATUS	•				
CT-1 VSD SPEED SIGNAL				•	
CT-1 BYPASS VALVE				•	
CW CONDUCTIVITY		•			

REVISIONS

NO.	DESCRIPTION	DATE

Facility Dynamics ENGINEERING
6780 Alexander Bell Drive Suite 220
Columbia, MD 21046 (410) 290-0800

State of Delaware

Standard Control Drawings

Eng	HJN
Drawn	HJN
Chkd	---
Appd	---
Issued	1/26/2009
Job No.	----
Scale	N/A
Proj Code	

DESIGN REVIEW

CHILLED WATER SYSTEM, FLAT PLATE EXCHANGER

00 OF 00
SHEET NUMBER

C-3.06
DWG NUMBER

CHILLED WATER SYSTEM, FLAT PLATE EXCHANGER

© 2008 FACILITY DYNAMICS ENGINEERING

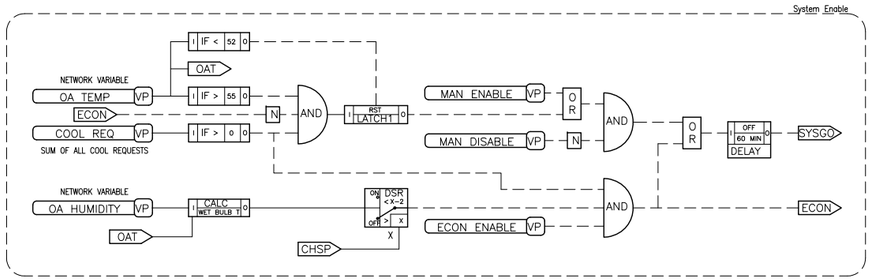

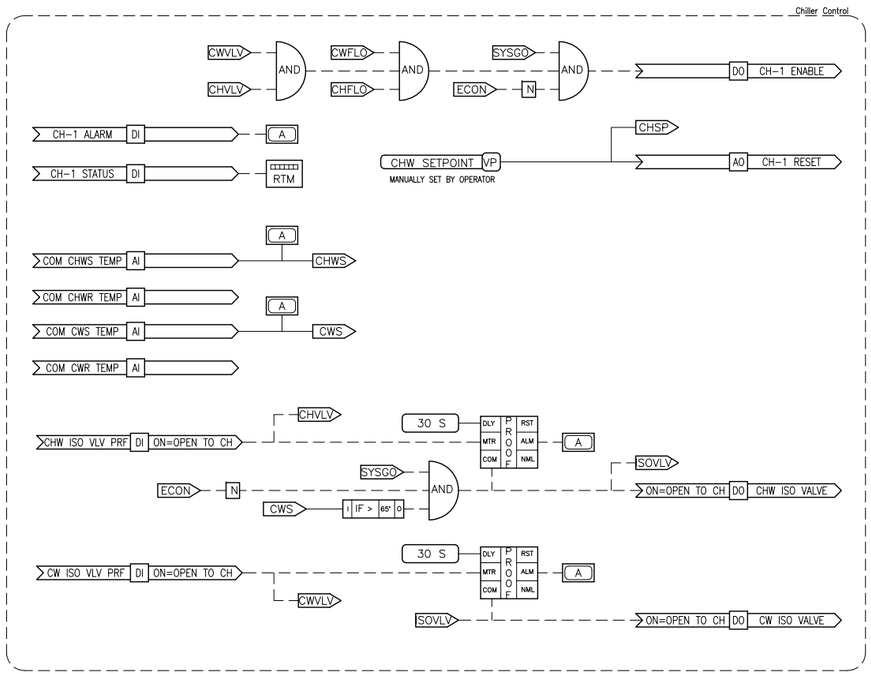

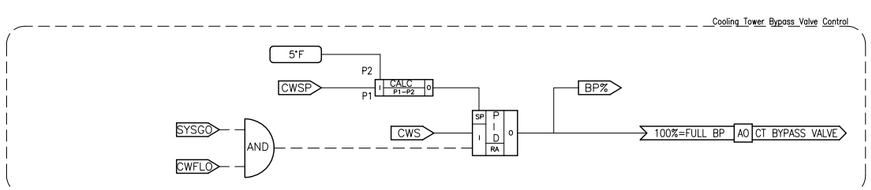

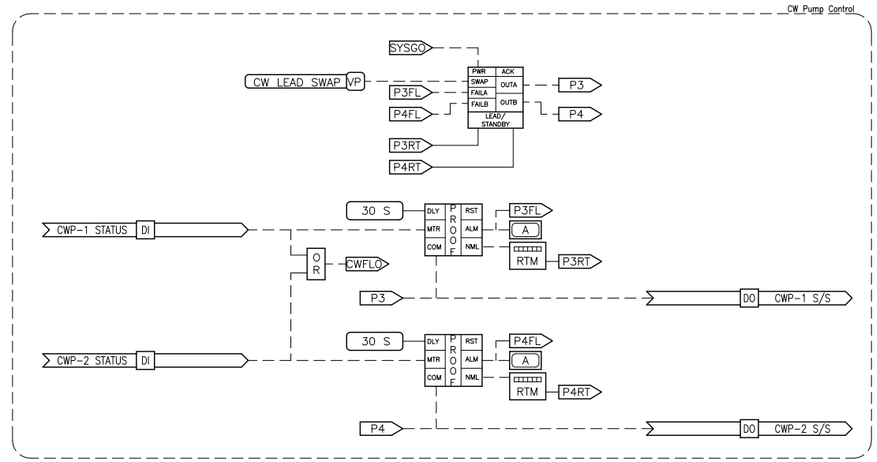

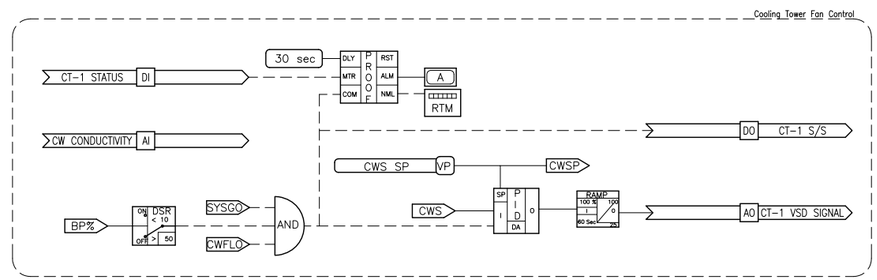

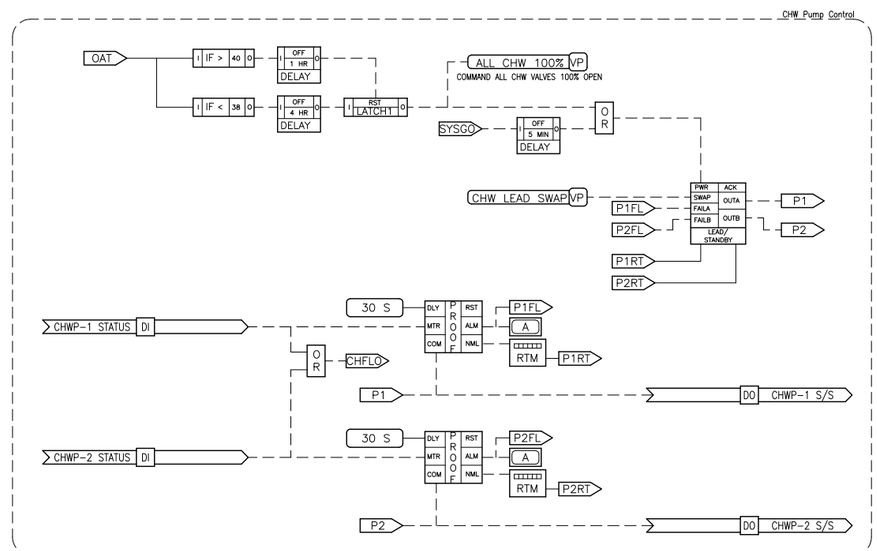

SEQUENCE OF OPERATION

GENERAL:
1. THE CONSTANT VOLUME SYSTEM IS DESIGNED TO PROVIDE CHILLED WATER TO HVAC EQUIPMENT WITH 3-WAY HYDRONIC COOLING COILS.
2. CHILLED WATER TEMPERATURE SHALL BE MAINTAINED BY THE CHILLER AND COOLING TOWER. WHEN WATER-SIDE ECONOMIZER IS AVAILABLE AND ENABLED BY THE BAS OPERATOR, CHILLED WATER TEMPERATURE SHALL BE MAINTAINED BY THE PLATE-AND-FRAME HEAT EXCHANGER AND THE COOLING TOWER (THE CHILLER SHALL NOT RUN).
3. CHILLER LEAVING WATER TEMPERATURE SHALL BE MAINTAINED BY THE CHILLER'S PACKAGED CONTROLS OR BY THE HEAT EXCHANGER CONTROL VALVE (IF WATER-SIDE ECONOMIZER IS ACTIVE).
4. PROVIDE ANY REQUIRED FIELD INTERLOCK WIRING REQUIRED FOR THE CHILLER.
5. REFER TO SECTION 15958 FOR CENTRAL PLANT EQUIPMENT MONITORING AND MANAGEMENT REQUIREMENTS.

SYSTEM ENABLE:
1. SYSTEM SHALL BE ENABLED:
   A. WHEN THE OUTSIDE AIR TEMPERATURE IS ABOVE 55°F (ADJ.), AND AND THERE IS AT LEAST 1 (ADJ.) COOL REQUEST, OR
   B. BY THE OPERATOR AT THE OPERATOR INTERFACE VIA A GRAPHIC ICON
   C. OR IF WATER-SIDE ECONOMIZER IS ENABLED (SEE BELOW)
2. ONCE ENABLED, SYSTEM SHALL REMAIN ENABLED FOR AT LEAST ONE HOUR (ADJ.).
3. SYSTEM SHALL BE DISABLED:
   A. WHEN THE OUTSIDE AIR TEMPERATURE DROPS BELOW 52°F (ADJ.), OR
   B. BY THE OPERATOR AT THE OPERATOR INTERFACE VIA A GRAPHIC ICON
   C. OR WHEN WATER-SIDE ECONOMIZER IS DISABLED (SEE BELOW).

WATER-SIDE ECONOMIZER ENABLE:
1. WATER-SIDE ECONOMIZER SHALL BE ENABLED:
   A. WHEN OUTDOOR WET BULB TEMPERATURE IS AT LEAST 2°F BELOW THE ACTIVE CHW SETPOINT, AND
   B. WHEN THERE IS AT LEAST 1 (ADJ.) COOL REQUEST, AND
   C. WATER-SIDE ECONOMIZER HAS BEEN ALLOWED BY THE OPERATOR AT THE OPERATOR INTERFACE VIA A GRAPHIC ICON
2. WATER-SIDE ECONOMIZER SHALL BE DISABLED:
   A. WHEN OUTDOOR WET BULB TEMPERATURE RISES ABOVE THE ACTIVE CHW SETPOINT, OR
   B. BY THE OPERATOR AT THE OPERATOR INTERFACE VIA A GRAPHIC ICON

CHILLED WATER PUMP CONTROL: BAS SHALL CONTROL THE PUMPS (CHWP-1,2) AS FOLLOWS:
1. START/STOP: LEAD PUMP SHALL BE STARTED WHENEVER THE SYSTEM IS ENABLED AND SHALL RUN CONTINUOUSLY. WHEN THE SYSTEM IS DISABLED, THE LEAD PUMP SHALL CONTINUE TO RUN FOR 5 MINUTES (ADJ.).
2. PROOF: BAS SHALL PROVE PUMP OPERATION AND USE THE STATUS INDICATION TO ACCUMULATE RUNTIME. UPON FAILURE OF THE LEAD PUMP, BAS SHALL ENERGIZE THE STANDBY PUMP.
3. LEAD/STANDBY PRIORITY: BAS SHALL ROTATE THE LEAD PUMP BASED ON ACCUMULATED RUNTIME. LEAD PUMP SHALL ALSO BE ASSIGNABLE BY THE OPERATOR AT THE OPERATOR INTERFACE VIA A GRAPHIC ICON.
4. FREEZE PROTECTION: WHEN OUTSIDE AIR TEMPERATURE DROPS BELOW 38°F FOR 4 CONTINUOUS HOURS, BAS SHALL START THE LEAD PUMP AND COMMAND ALL CHW VALVES 100% OPEN TO THEIR RESPECTIVE COIL. SYSTEM SHALL RETURN TO NORMAL WHEN OUTSIDE AIR TEMPERATURE RISES ABOVE 40°F FOR 1 CONTINUOUS HOUR. ALL VALUES SHALL BE ADJUSTABLE.

CONDENSER WATER PUMP CONTROL: BAS SHALL CONTROL THE PUMPS (CWP-1,2) AS FOLLOWS:
1. START/STOP: LEAD PUMP SHALL BE STARTED WHENEVER THE SYSTEM IS ENABLED AND SHALL RUN CONTINUOUSLY. WHEN THE SYSTEM IS DISABLED, THE LEAD PUMP SHALL CONTINUE TO RUN FOR 5 MINUTES (ADJ.).
2. PROOF: BAS SHALL PROVE PUMP OPERATION AND USE THE STATUS INDICATION TO ACCUMULATE RUNTIME. UPON FAILURE OF THE LEAD PUMP, BAS SHALL ENERGIZE THE STANDBY PUMP.
3. LEAD/STANDBY PRIORITY: BAS SHALL ROTATE THE LEAD PUMP BASED ON ACCUMULATED RUNTIME. LEAD PUMP SHALL ALSO BE ASSIGNABLE BY THE OPERATOR AT THE OPERATOR INTERFACE VIA A GRAPHIC ICON.

CHILLER ISOLATION VALVE CONTROL: BAS SHALL CONTROL THE ISOLATION VALVES (V-1,2) AS FOLLOWS:
1. OPEN TO CHILLER: VALVES SHALL BE COMMANDED OPEN TO THE CHILLER WHEN:
   A. THE SYSTEM IS ENABLED, AND
   B. WATER-SIDE ECONOMIZER IS NOT ENABLED, AND
   C. CONDENSER WATER SUPPLY TEMPERATURE IS GREATER THAN 65°F (ADJ.)
2. PROOF: BAS SHALL PROVE THE OPEN POSITION OF EACH VALVE AND GENERATE AN ALARM ON PROOF FAILURE.

COOLING TOWER BYPASS VALVE CONTROL: WHEN CONDENSER WATER PUMP STATUS IS PROVEN, BAS SHALL MODULATE THE BYPASS VALVE (V-4) VIA A RA PID LOOP TO MAINTAIN MINIMUM CONDENSER WATER SUPPLY TEMPERATURE AT CWS SETPOINT MINUS 5°F (ADJ.).

COOLING TOWER FAN CONTROL: BAS SHALL CONTROL THE TOWER FAN AS FOLLOWS:
1. START/STOP: TOWER FAN SHALL BE STARTED WHEN:
   A. COOLING IS ENABLED, AND
   B. CONDENSER WATER PUMP STATUS IS PROVEN, AND
   C. COOLING TOWER BYPASS VALVE IS LESS THAN 10% OPEN TO THE BYPASS, WITH A 50% CYCLE DIFFERENTIAL (ALL VALUES ADJUSTABLE).
2. PROOF: BAS SHALL PROVE FAN OPERATION AND USE THE STATUS INDICATION TO ACCUMULATE RUNTIME.
3. VSD CONTROL: WHENEVER THE TOWER IS ENABLED, BAS SHALL CONTROL THE OUTPUT OF THE FAN VSD PER A DA PID LOOP TO MAINTAIN CONDENSER WATER SUPPLY TEMPERATURE SETPOINT. ON START AND STOP, THE VSD SHALL RAMP TO SPEED AND SLOW DOWN WITHIN ADJUSTABLE ACCELERATION AND DECELERATION LIMITS.
4. CONDENSER WATER SUPPLY TEMPERATURE SETPOINT: THE ACTIVE CWS TEMPERATURE SETPOINT SHALL BE 75°F (ADJ.), UNLESS WATER-SIDE ECONOMIZER IS ACTIVE, IN WHICH CASE THE SETPOINT SHALL BE 45°F (ADJ.).

CHILLED WATER SUPPLY TEMPERATURE SETPOINT: THE CHILLED WATER SUPPLY TEMPERATURE SETPOINT SHALL BE MANUALLY SET BY THE OPERATOR.

CHILLER CONTROL: BAS SHALL CONTROL THE CHILLER AS FOLLOWS:
1. ENABLE: BAS SHALL ENABLE THE CHILLER WHEN:
   A. THE SYSTEM IS ENABLED, AND
   B. WATER-SIDE ECONOMIZER IS NOT ENABLED, AND
   C. CHILLED WATER AND CONDENSER WATER PUMP STATUS IS PROVEN, AND
   D. CHILLED WATER AND CONDENSER WATER ISOLATION VALVES ARE PROVEN OPEN TO THE CHILLER.
2. STATUS: BAS SHALL MONITOR THE CHILLER STATUS CONTACTS AND ACCUMULATE RUNTIME.
3. SETPOINT RESET: BAS SHALL RESET THE CHILLER SUPPLY WATER TEMPERATURE SETPOINT TO MATCH THE ACTIVE SYSTEM CHILLED WATER SUPPLY TEMPERATURE SETPOINT.
4. ALARM: BAS SHALL MONITOR THE CHILLER ALARM CONTACTS AND GENERATE A CRITICAL ALARM AS REQUIRED.

© 2009 FACILITY DYNAMICS ENGINEERING

REVISIONS

NO.	DESCRIPTION	DATE

Facility Dynamics ENGINEERING
6180 Alexander Bell Drive Suite 220
Columbia, MD 21046 (410) 290-0800

State of Delaware
Standard Control Drawings

Eng	HJN
Drawn	HJN
Chkd	---
Appd	---
Issued	1/26/2009
Job No.	07149
Scale	N/A
Proj Code	

DESIGN REVIEW

CHILLED WATER SYSTEM, FLAT PLATE EXCHANGER

00 OF 00
SHEET NUMBER

C-3.07
DWG NUMBER

CHILLED WATER SYSTEM, FLAT PLATE EXCHANGER

Software Logic Diagram

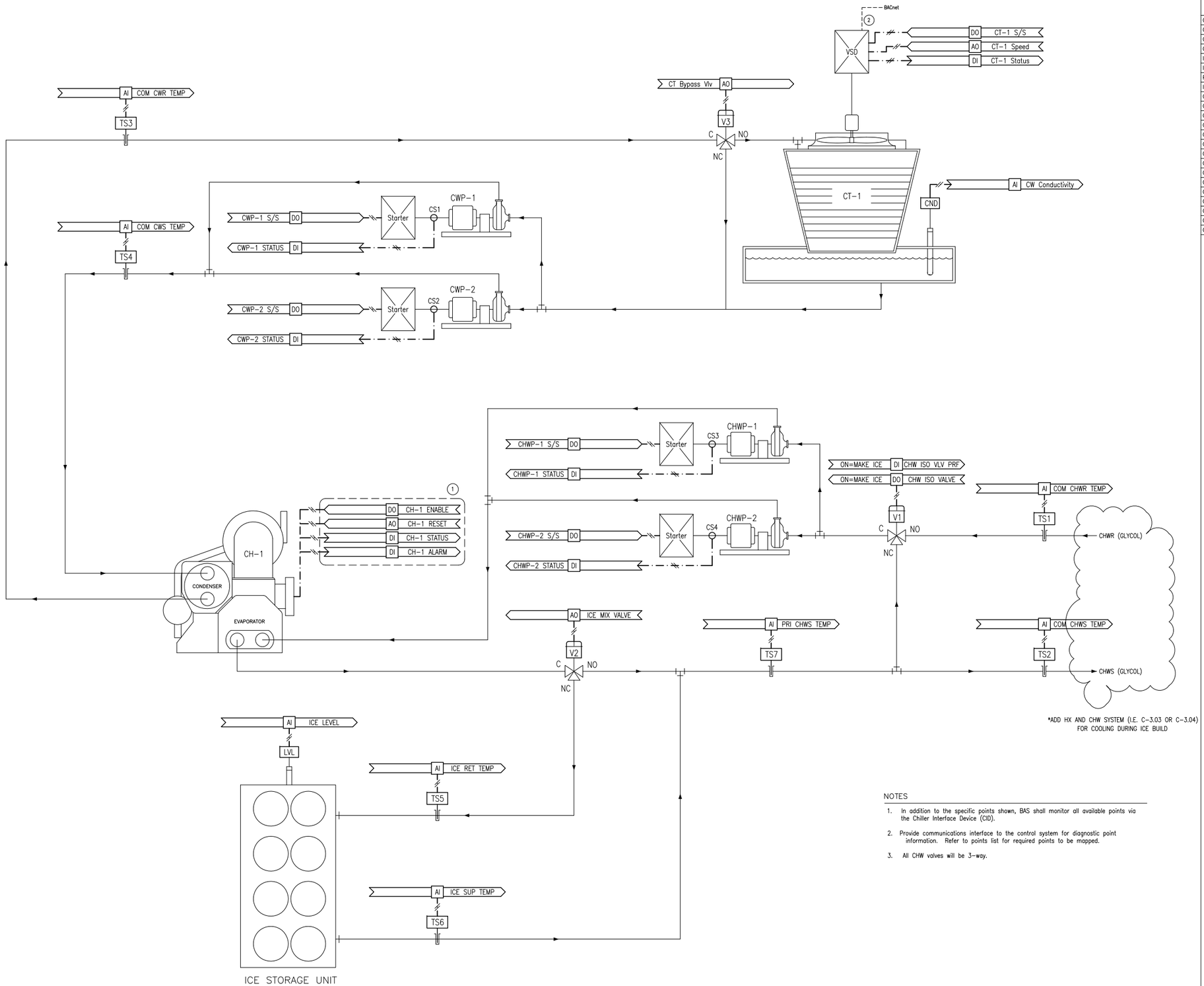

NOTES

1. In addition to the specific points shown, BAS shall monitor all available points via the Chiller Interface Device (CID).
2. Provide communications interface to the control system for diagnostic point information. Refer to points list for required points to be mapped.
3. All CHW valves will be 3-way.

POINTS LIST

POINT DESCRIPTOR	POINT TYPE DI	AI	DO	AO	COMMENTS
COMMON CHWS TEMPERATURE		•			ALARM 3°F ABOVE SETPOINT
COMMON CHWR TEMPERATURE		•			
COMMON CWS TEMPERATURE		•			ALARM 3°F ABOVE SETPOINT
COMMON CWR TEMPERATURE		•			
ICE SUPPLY TEMPERATURE		•			ALARM 5°F ABOVE SETPOINT
ICE RETURN TEMPERATURE		•			
PRIMARY CHWS TEMPERATURE		•			
ICE MIX VALVE				•	
CHW ISOLATION VALVE			•		
CHW ISOLATION VALVE PROOF	•				PROOF ALARM
CH-1 ENABLE			•		
CH-1 RESET				•	
CH-1 STATUS	•				
CH-1 GENERAL ALARM	•				CRITICAL ALARM
CHWP-X START/STOP			•		TYPICAL FOR 2
CHWP-X STATUS	•				TYPICAL FOR 2; PROOF ALARM
CWP-X START/STOP			•		TYPICAL FOR 2
CWP-X STATUS	•				TYPICAL FOR 2; PROOF ALARM
CT-1 START/STOP			•		
CT-1 STATUS	•				
CT-1 VSD SPEED SIGNAL				•	
CT-1 BYPASS VALVE				•	
CW CONDUCTIVITY		•			

REVISIONS

NO.	DESCRIPTION	DATE

Facility Dynamics ENGINEERING
6780 Alexander Bell Drive Suite 220
Columbia, MD 21046 (410) 290-0800

State of Delaware

Standard Control Drawings

Eng	HJN
Drawn	HJN
Chkd	---
Appd	---
Issued	1/26/2009
Job No.	----
Scale	N/A
Proj Code	

PRELIMINARY

CHILLED WATER SYSTEM, ICE STORAGE

00 OF 00
SHEET NUMBER

C-3.08
DWG NUMBER

CHILLED WATER SYSTEM, ICE STORAGE

© 2008 FACILITY DYNAMICS ENGINEERING

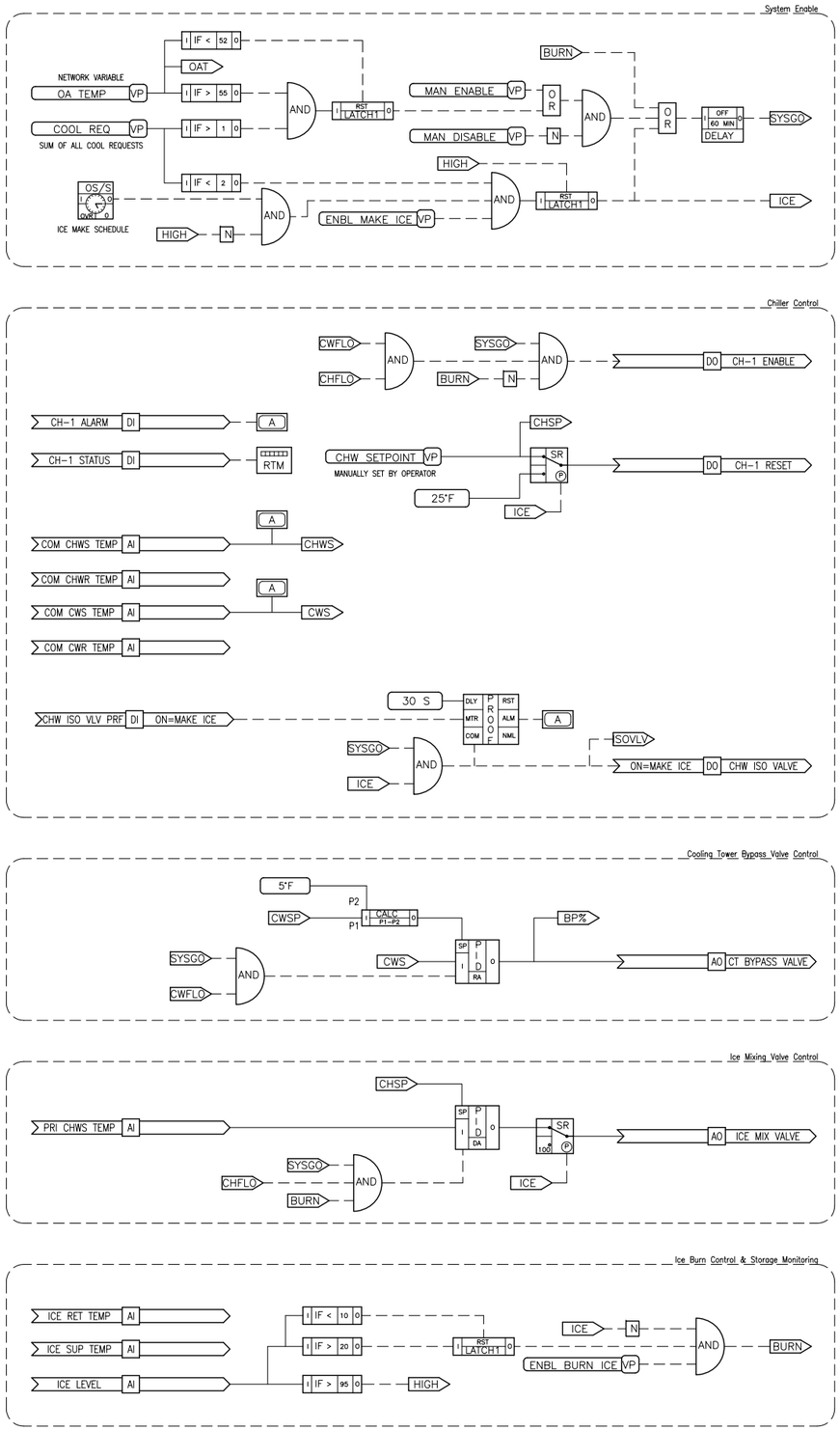

CHILLED WATER SYSTEM, ICE STORAGE

Software Logic Diagram

SEQUENCE OF OPERATION

GENERAL:
1. THE CONSTANT VOLUME SYSTEM IS DESIGNED TO PROVIDE CHILLED WATER TO HVAC EQUIPMENT WITH 3-WAY HYDRONIC COOLING COILS.
2. CHILLED WATER TEMPERATURE SHALL BE MAINTAINED BY THE CHILLER AND COOLING TOWER. WHEN STORED ICE IS AVAILABLE AND ICE BURNING IS ENABLED BY THE BAS OPERATOR, CHILLED WATER TEMPERATURE SHALL BE MAINTAINED BY THE ICE STORAGE MIXING VALVE (THE CHILLER SHALL NOT RUN UNLESS ICE STORAGE IS DEPLETED).
3. CHILLER LEAVING WATER TEMPERATURE SHALL BE MAINTAINED BY THE CHILLER'S PACKAGED CONTROLS OR BY THE ICE STORAGE MIXING VALVE (IF ICE STORAGE BURNING IS ACTIVE).
4. PROVIDE ANY REQUIRED FIELD INTERLOCK WIRING REQUIRED FOR THE CHILLER.
5. REFER TO SECTION 15958 FOR CENTRAL PLANT EQUIPMENT MONITORING AND MANAGEMENT REQUIREMENTS.

SYSTEM ENABLE:
1. SYSTEM SHALL BE ENABLED:
   A. WHEN THE OUTSIDE AIR TEMPERATURE IS ABOVE 55°F (ADJ.), AND AND THERE IS AT LEAST 1 (ADJ.) COOL REQUEST, OR
   B. BY THE OPERATOR AT THE OPERATOR INTERFACE VIA A GRAPHIC ICON
   C. OR IF ICE STORAGE (MAKING OR BURNING) IS ENABLED (SEE BELOW)
2. ONCE ENABLED, SYSTEM SHALL REMAIN ENABLED FOR AT LEAST ONE HOUR (ADJ.).
3. SYSTEM SHALL BE DISABLED:
   A. WHEN THE OUTSIDE AIR TEMPERATURE DROPS BELOW 52°F (ADJ.), OR
   B. BY THE OPERATOR AT THE OPERATOR INTERFACE VIA A GRAPHIC ICON
   C. OR WHEN ICE STORAGE (MAKING OR BURNING) IS DISABLED (SEE BELOW).

ICE STORAGE CONTROL:
1. MAKE ICE CONTROL SHALL BE ENABLED:
   A. WHEN ALL CONDITIONS FOR CHILLER ICE MODE HAVE BEEN MET AND
   B. COOLING REQUESTS ARE 1 (ADJ.) OR LESS, AND
   C. THE ICE MAKING SCHEDULE IS ACTIVE, AND
   D. ICE MAKE MODE HAS BEEN ALLOWED BY THE OPERATOR AT THE OPERATOR INTERFACE VIA A GRAPHIC ICON
2. MAKE ICE CONTROL SHALL BE DISABLED:
   A. WHEN ICE STORAGE LEVEL EXCEEDS 95% (ADJ.), OR
   B. THE ICE MAKING SCHEDULE IS DEACTIVATED, OR
   C. BY THE OPERATOR AT THE OPERATOR INTERFACE VIA A GRAPHIC ICON
3. BURN ICE CONTROL SHALL BE ENABLED:
   A. WHEN ALL CONDITIONS FOR NORMAL SYSTEM OPERATION HAVE BEEN MET AND
   B. THE ICE STORAGE LEVEL EXCEEDS 20% (ADJ.), AND
   C. ICE BURN MODE HAS BEEN ALLOWED BY THE OPERATOR AT THE OPERATOR INTERFACE VIA A GRAPHIC ICON
4. BURN ICE CONTROL SHALL BE DISABLED:
   A. THE ICE STORAGE LEVEL FALLS BELOW 10% (ADJ.), OR
   B. BY THE OPERATOR AT THE OPERATOR INTERFACE VIA A GRAPHIC ICON

CHILLED WATER PUMP CONTROL: BAS SHALL CONTROL THE PUMPS (CHWP-1,2) AS FOLLOWS:
1. START/STOP: LEAD PUMP SHALL BE STARTED WHENEVER THE SYSTEM IS ENABLED AND SHALL RUN CONTINUOUSLY. WHEN THE SYSTEM IS DISABLED, THE LEAD PUMP SHALL CONTINUE TO RUN FOR 5 MINUTES (ADJ.).
2. PROOF: BAS SHALL PROVE PUMP OPERATION AND USE THE STATUS INDICATION TO ACCUMULATE RUNTIME. UPON FAILURE OF THE LEAD PUMP, BAS SHALL ENERGIZE THE STANDBY PUMP.
3. LEAD/STANDBY PRIORITY: BAS SHALL ROTATE THE LEAD PUMP BASED ON ACCUMULATED RUNTIME. LEAD PUMP SHALL ALSO BE ASSIGNABLE BY THE OPERATOR AT THE OPERATOR INTERFACE VIA A GRAPHIC ICON.

CONDENSER WATER PUMP CONTROL: BAS SHALL CONTROL THE PUMPS (CWP-1,2) AS FOLLOWS:
1. START/STOP: LEAD PUMP SHALL BE STARTED WHENEVER THE SYSTEM IS ENABLED AND ICE BURN MODE IS NOT ACTIVE. LEAD PUMP SHALL RUN CONTINUOUSLY. WHEN THE SYSTEM IS DISABLED, THE LEAD PUMP SHALL CONTINUE TO RUN FOR 5 MINUTES (ADJ.).
2. PROOF: BAS SHALL PROVE PUMP OPERATION AND USE THE STATUS INDICATION TO ACCUMULATE RUNTIME. UPON FAILURE OF THE LEAD PUMP, BAS SHALL ENERGIZE THE STANDBY PUMP.
3. LEAD/STANDBY PRIORITY: BAS SHALL ROTATE THE LEAD PUMP BASED ON ACCUMULATED RUNTIME. LEAD PUMP SHALL ALSO BE ASSIGNABLE BY THE OPERATOR AT THE OPERATOR INTERFACE VIA A GRAPHIC ICON.

CHILLER ISOLATION VALVE CONTROL: BAS SHALL CONTROL THE ISOLATION VALVE (V-1) AS FOLLOWS:
1. VALVE SHALL BE COMMANDED OPEN TO THE BUILDING LOAD WHEN:
   A. THE SYSTEM IS ENABLED, AND
   B. ICE MAKE MODE IS NOT ENABLED
2. VALVE SHALL BE COMMANDED CLOSED TO THE BUILDING LOAD WHEN:
   A. THE SYSTEM IS ENABLED FOR ICE MAKE MODE.
3. PROOF: BAS SHALL PROVE THE OPEN POSITION OF EACH VALVE AND GENERATE AN ALARM ON PROOF FAILURE.

COOLING TOWER BYPASS VALVE CONTROL: WHEN CONDENSER WATER PUMP STATUS IS PROVEN, BAS SHALL MODULATE THE BYPASS VALVE (V-3) VIA A RA PID LOOP TO MAINTAIN MINIMUM CONDENSER WATER SUPPLY TEMPERATURE AT CWS SETPOINT MINUS 5°F (ADJ.).

COOLING TOWER FAN CONTROL: BAS SHALL CONTROL THE TOWER FAN AS FOLLOWS:
1. START/STOP: TOWER FAN SHALL BE STARTED WHEN:
   A. COOLING IS ENABLED, AND
   B. CONDENSER WATER PUMP STATUS IS PROVEN, AND
   C. COOLING TOWER BYPASS VALVE IS LESS THAN 5% OPEN TO THE BYPASS, WITH A 45% CYCLE DIFFERENTIAL (ALL VALUES ADJUSTABLE).
2. PROOF: BAS SHALL PROVE FAN OPERATION AND USE THE STATUS INDICATION TO ACCUMULATE RUNTIME.
3. VSD CONTROL: WHENEVER THE TOWER IS ENABLED, BAS SHALL CONTROL THE OUTPUT OF THE FAN VSD PER A DA PID LOOP TO MAINTAIN CONDENSER WATER SUPPLY TEMPERATURE SETPOINT. ON START AND STOP, THE VSD SHALL RAMP TO SPEED AND SLOW DOWN WITHIN ADJUSTABLE ACCELERATION AND DECELERATION LIMITS.
4. CONDENSER WATER SUPPLY TEMPERATURE SETPOINT: THE ACTIVE CWS TEMPERATURE SETPOINT SHALL BE 75°F (ADJ.), UNLESS WATER-SIDE ECONOMIZER IS ACTIVE, IN WHICH CASE THE SETPOINT SHALL BE 45°F (ADJ.).

CHILLED WATER SUPPLY TEMPERATURE SETPOINT: NORMAL CHILLED WATER TEMPERATURE SETPOINT SHALL BE SET BY THE OPERATOR. DURING ICE MAKE MODE CHILLER SETPOINT SHALL BE 25°F (ADJ.)

CHILLER CONTROL: BAS SHALL CONTROL THE CHILLER AS FOLLOWS:
1. ENABLE: BAS SHALL ENABLE THE CHILLER WHEN:
   A. THE SYSTEM IS ENABLED, AND
   B. ICE BURN MODE IS NOT ENABLED, AND
   C. CHILLED WATER AND CONDENSER WATER PUMP STATUS IS PROVEN.
2. STATUS: BAS SHALL MONITOR THE CHILLER STATUS CONTACTS AND ACCUMULATE RUNTIME.
3. SETPOINT RESET: BAS SHALL RESET THE CHILLER SUPPLY WATER TEMPERATURE SETPOINT TO MATCH THE ACTIVE SYSTEM CHILLED WATER SUPPLY TEMPERATURE SETPOINT.
4. ALARM: BAS SHALL MONITOR THE CHILLER ALARM CONTACTS AND GENERATE A CRITICAL ALARM AS REQUIRED.

© 2008 FACILITY DYNAMICS ENGINEERING

REVISIONS

NO.	DESCRIPTION	DATE

Facility Dynamics ENGINEERING
6780 Alexander Bell Drive Suite 220
Columbia, MD 21046 (410) 290-0800

State of Delaware

Standard Control Drawings

Eng	HJN
Drawn	HJN
Chkd	---
Appd	---
Issued	1/26/2009
Job No.	----
Scale	N/A
Proj Code	

FIRST DRAFT

CHILLED WATER SYSTEM, ICE STORAGE

00 OF 00
SHEET NUMBER

C-3.09
DWG NUMBER

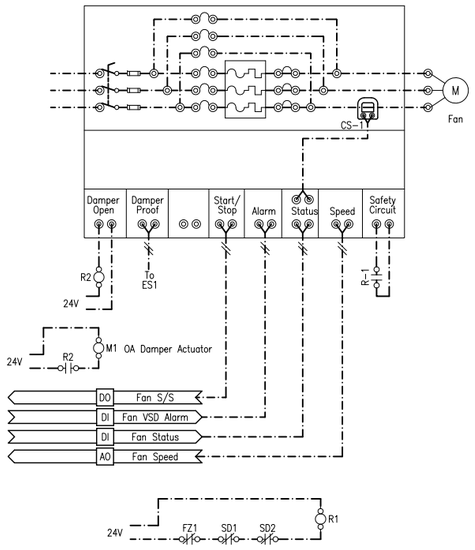

NOTES
1. DAMPER INTERLOCK TYPICAL FOR 100% OA UNITS ONLY. 2. SAFETY INTERLOCK WIRING MUST BE MODIFIED TO REFLECT ACTUAL UNIT DEVICES. 3. ALL WIRING MUST BE FIELD VERIFIED.

TYPICAL FAN VSD

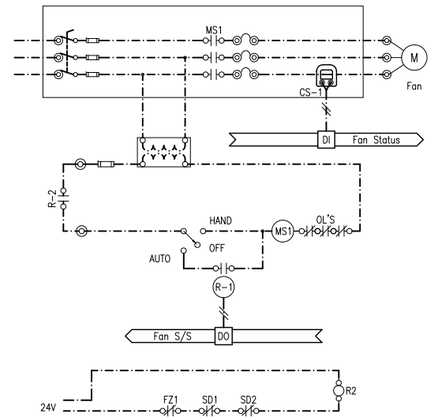

NOTES
1. SAFETY INTERLOCK WIRING MUST BE MODIFIED TO REFLECT ACTUAL UNIT DEVICES. 2. ALL WIRING MUST BE FIELD VERIFIED.

TYPICAL THREE PHASE FAN STARTER

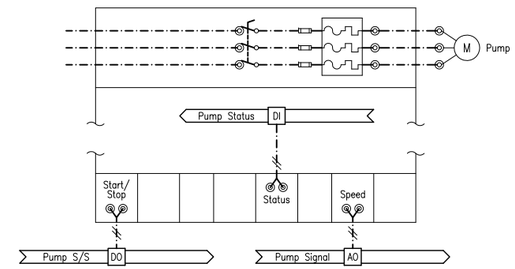

NOTES
1. ALL WIRING MUST BE FIELD VERIFIED.

TYPICAL PUMP VSD

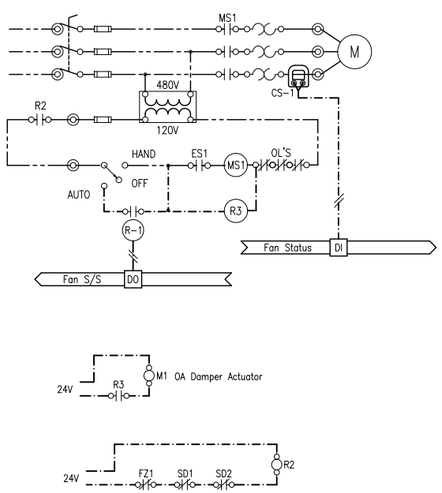

NOTES
1. DAMPER INTERLOCK TYPICAL FOR 100% OA UNITS ONLY. 2. SAFETY INTERLOCK WIRING MUST BE MODIFIED TO REFLECT ACTUAL UNIT DEVICES. 3. ALL WIRING MUST BE FIELD VERIFIED.

TYPICAL THREE PHASE FAN STARTER WITH DAMPER INTERLOCK

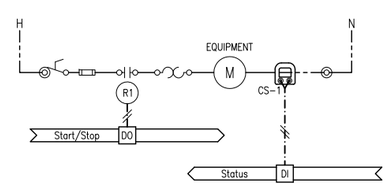

NOTES
1. ALL WIRING MUST BE FIELD VERIFIED.

TYPICAL SINGLE PHASE STARTER

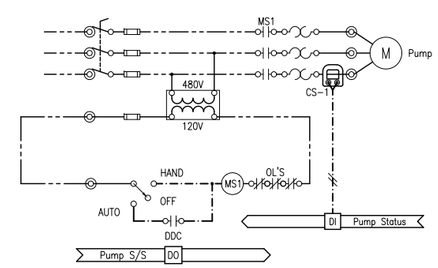

NOTES
1. ALL WIRING MUST BE FIELD VERIFIED.

TYPICAL PUMP STARTER

© 2008 FACILITY DYNAMICS ENGINEERING

REVISIONS

NO.	DESCRIPTION	DATE

Facility Dynamics ENGINEERING
6180 Alexander Bell Drive Suite 220
Columbia, MD 21046 (410) 290-0800

State of Delaware

Standard Control Drawings

Eng	HJN
Drawn	HJN
Chkd	---
Appd	---
Issued	05/14/2008
Job No.	----
Scale	N/A
Proj Code	

DESIGN REVIEW

ELECTRIC LADDER DIAGRAMS

00 OF 00
SHEET NUMBER

C-4.00
DWG NUMBER

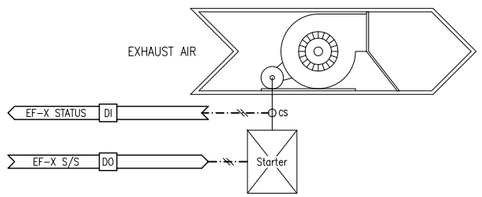

SCHEDULED EXHAUST FAN

POINTS LIST

POINT DESCRIPTOR	POINT TYPE DI	AI	DO	AO	COMMENTS
EF-X START/STOP			•		
EF-X STATUS	•				PROOF ALARM

SEQUENCE OF OPERATION

EXHAUST FAN CONTROL: BAS SHALL CONTROL THE FAN AS FOLLOWS:
1. START/STOP: FAN SHALL BE STARTED BASED ON IT'S SCHEDULE OR WHEN IT'S ASSOCIATED AHU IS STARTED.
2. PROOF: BAS SHALL PROVE FAN OPERATION AND USE THE STATUS INDICATION TO ACCUMULATE RUNTIME.
3. SAFETY LOCKOUT: ALL EXHAUST FANS SHALL BE DE-ENERGIZED WHEN A FIRE ALARM CONDITION IS DETECTED.

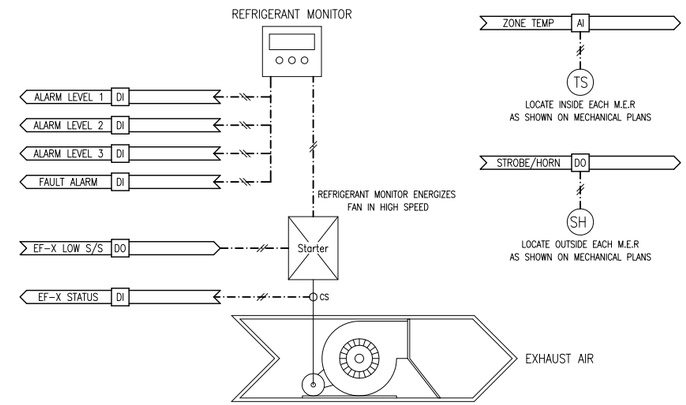

REFRIGERANT MONITORING AND RELIEF

POINTS LIST

POINT DESCRIPTOR	POINT TYPE DI	AI	DO	AO	COMMENTS
ZONE TEMP		•			
EF-X LOW S/S			•		
EF-X STATUS	•				PROOF ALARM
ALARM LEVEL 1	•				
ALARM LEVEL 2	•				
ALARM LEVEL 3	•				CRITICAL ALARM
FAULT ALARM	•				CRITICAL ALARM
STROBE/HORN			•		

SEQUENCE OF OPERATION

BAS SHALL MONITOR THE ZONE TEMPERATURE AND CONTROL THE EXHAUST FAN AS FOLLOWS:
1. BAS SHALL COMMAND THE OPERATION OF THE EXHAUST FAN IN LOW SPEED AND IT SHALL RUN CONTINUOUSLY WHENEVER THE ZONE TEMPERATURE EXCEEDS SETPOINT.
2. ZONE TEMPERATURE SETPOINT SHALL BE 78°F (ADJ.), WITH A 2°F CYCLE DIFFERENTIAL.
3. EXHAUST FAN PROOF: BAS SHALL PROVE LOW SPEED FAN OPERATION AND USE THE STATUS INDICATION TO ACCUMULATE RUNTIME.

BAS SHALL MONITOR THE ALARM RELAYS ASSOCITATED WITH THE REFRIGERANT MONITOR AND THE STATUS OF THE EXHAUST FAN AS FOLLOWS:
1. REFRIGERATNT MONITOR: BAS SHALL MONITOR 3 DISCRETE ALARM LEVEL RELAYS AND 1 MONITOR FAULT ALARM RELAY. REFER TO SECTION 15951 FOR FULL MONITOR REQUIREMENTS.
2. EXHAUST FAN PROOF: BAS SHALL PROVE HIGH SPEED FAN OPERATION AND USE THE STATUS INDICATION TO ACCUMULATE RUNTIME.
3. STROBE/HORN: WHENEVER AN ALARM LEVEL 2,3 OR MALFUNCTION ALARM OCCURS, BAS SHALL ENERGIZE STROBE/HORN ANNUNCIATORS OUTSIDE ALL ENTRANCES TO THE MECHANICAL EQUIPMENT ROOM.

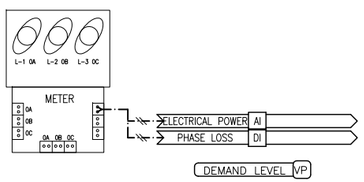

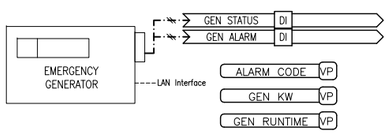

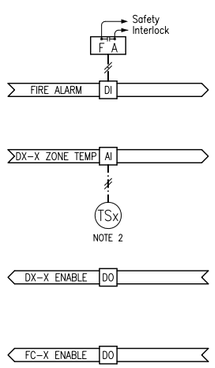

MISCELLANEOUS MONITORING

POINTS LIST

POINT DESCRIPTOR	POINT TYPE DI	AI	DO	AO	COMMENTS
ELECTRICAL POWER		•			
PHASE LOSS	•				
DEMAND LEVEL					BACNET READ POINT
EMERGENCY GENERATOR STATUS	•				
EMERGENCY GENERATOR ALARM	•				CRITICAL ALARM
GENERATOR ALARM CODE					BACNET READ POINT
GENERATOR KW					BACNET READ POINT
GENERATOR RUNTIME (HRS)					BACNET READ POINT
MAIN AIR PRESSURE		•			CRITICAL ALARM < 15 PSI
FIRE ALARM	•				CRITICAL ALARM
DX-X ENABLE			•		
DX-X ZONE TEMPERATURE		•			CRITICAL ALARM < 50°F
FC-X ENABLE			•		

SEQUENCE OF OPERATION

ELECTRICAL POWER: BAS SHALL MONITOR THE BUILDING POWER AND BROADCAST A DEMAND LEVEL FOR LOAD SHEDDING PER 15958 "DEMAND LIMITING CONTROL".

PHASE LOSS: BAS SHALL DEENERGIZE AND LOCK-OUT THREE-PHASE EQUIPMENT UPON ACTIVATION OF THE PHASE LOSS ALARM. BAS OPERATOR MUST MANUALLY RESET THREE-PHASE EQUIPMENT LOCK-OUT.

EMERGENCY GENERATOR: BAS SHALL MONITOR THE GENERATOR RUN STATUS AND ACCUMULATE RUNTIME. BAS SHALL MONITOR A GENERAL ALARM POINT WHICH WILL BE ACTIVE FOR ALL CRITICAL GENERATOR ALARMS.

FIRE ALARM SYSTEM: BAS SHALL MONITOR AN ALARM POINT FROM THE FIRE ALARM SYSTEM (FAS) AS WELL AS A SOFTWARE GRAPHIC SWITCH (OPERATOR ADJUSTABLE) TO INDEX THE BUILDING TO A FIRE ALARM MODE.

PACKAGED DX AC UNITS:
1. SHALL BE CONTROLLED BY A THERMOSTAT SUPPLIED WITH THE UNIT
2. BAS SHALL ENABLE UNITS BASED ON A OCCUPIED/UNOCCUPIED SCHEDULE.
3. BAS SHALL MONITOR ZONE TEMPERATURE AND GENERATE A CRITICAL ALARM WHEN IT DROPS BELOW 50°F (ADJ.).

THERMOSTAT-CONTROLLED FANCOIL UNITS:
1. SHALL BE CONTROLLED BY A THERMOSTAT SUPPLIED WITH THE UNIT
2. BAS SHALL ENABLE UNITS BASED ON A OCCUPIED/UNOCCUPIED SCHEDULE

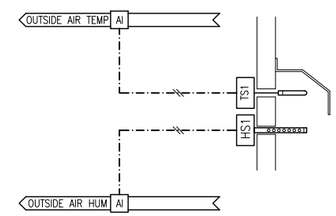

OUTSIDE AIR SENSORS

POINTS LIST

POINT DESCRIPTOR	POINT TYPE DI	AI	DO	AO	COMMENTS
OUTSIDE AIR TEMPERATURE		•			
OUTSIDE AIR HUMIDITY		•			

NOTES

1. MOUNT OUTSIDE AIR SENSORS UNDER A SUN SHIELD, AS HIGH ON THE WALL AS POSSIBLE, ON THE NORTH SIDE OF THE BUILDING. LOCATION SHALL BE SELECTED SUCH THAT SOLAR RADIATION, EXHAUST, HEATING SOURCES, AND COOLING SOURCES WILL NOT AFFECT SENSOR READINGS.
2. LARGE INSTALLATIONS (FACILITY OVER [X] SQ.FT.) REQUIRE AT LEAST ONE REDUNDANT OUTSIDE AIR SENSOR INSTALLATION.

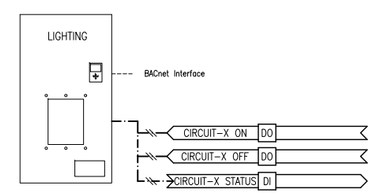

LIGHTING CONTROL

POINTS LIST

POINT DESCRIPTOR	POINT TYPE DI	AI	DO	AO	COMMENTS
LIGHT CIRCUIT-X ON			•		BACNET OR PHYSICAL POINT
LIGHT CIRCUIT-X OFF			•		BACNET OR PHYSICAL POINT
LIGHT CIRCUIT-X STATUS	•				BACNET OR PHYSICAL POINT

SEQUENCE OF OPERATION

BAS SHALL CONTROL LIGHTING CIRCUITS AS FOLLOWS:

EXTERIOR LIGHTING: BAS SHALL COMMAND LIGHTING CIRCUIT(S) ON/OFF BASED ON AN ASTRONOMICAL SUNRISE/SUNSET CLOCK WITH OFFSET CAPABILITY ALLOWING THE EXTERIOR LIGHTS TO COME ON 2 HOUR BEFORE SUNSET (ADJ.) AND REMAIN ON UNTIL 2 HOUR AFTER SUNRISE (ADJ.).

INTERIOR LIGHTING: BAS SHALL COMMAND LIGHING CIRCUIT(S) ON/OFF BASED ON BUILDING SCHEDULED OCCUPANCY, SECURITY AND/OR LOCAL OVERRIDE SCHEDULES.

BAS OPERATOR SHALL HAVE THE CAPABILITY TO MANUALLY OVERRIDE ALL LIGHTING CIRCUITS FROM THE OPERATOR WORKSTATION OR LOCALLY AT THE LIGHTING CONTROL PANEL.

© 2008 FACILITY DYNAMICS ENGINEERING

REVISIONS

NO.	DESCRIPTION	DATE

Facility Dynamics ENGINEERING
6180 Alexander Bell Drive Suite 220
Columbia, MD 21046 (410) 290-0800

State of Delaware

Standard Controls Drawings

Eng	HJN
Drawn	HJN
Chkd	---
Appd	---
Issued	05/14/2008
Job No.	----
Scale	N/A
Proj Code	

DESIGN REVIEW

MISCELLANEOUS CONTROLS

00 OF 00
SHEET NUMBER

C-4.01
DWG NUMBER